hansgrohe

**Service**

9690/000 / 98854000

97139XXC

**Starck (6V)**
10100800 / 10 05800

3 - 6

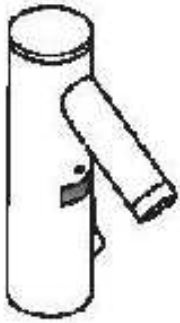

**Electronic (6V)**
105 00XX0 / 15101XX0
31100000 / 31101000

7 - 9

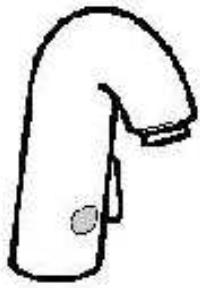

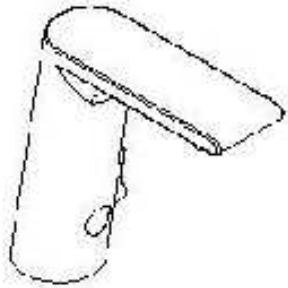

**Electronic (9V)**
15180XX0 / 15181XX0
31102000 / 31103000

10 - 12

**Brausethermostat UP mit elektronischer Start- / Stop-Taste (6 Volt)**
**Thermostatic Mixer with Electronic Start / Stop Button (6 Volt)**
15720000 / 15740000

13 - 15

**Starck (6V)**
10100830 / 10 05830

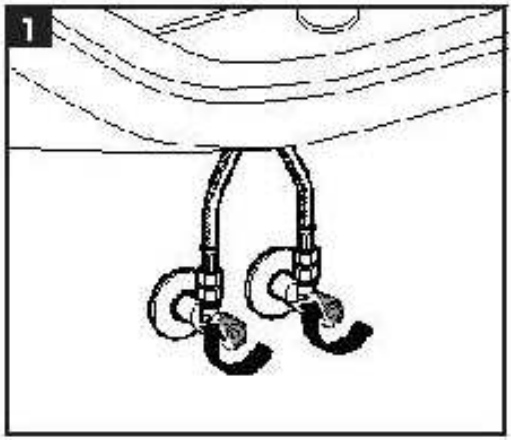


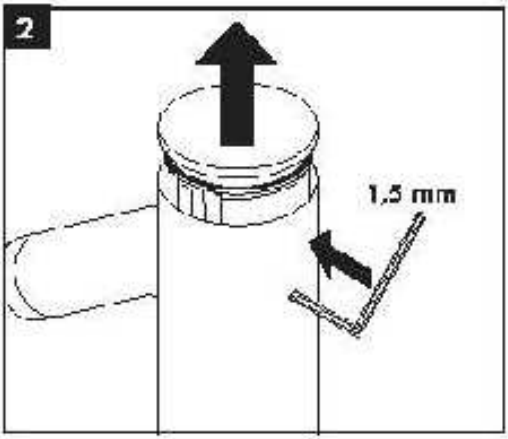


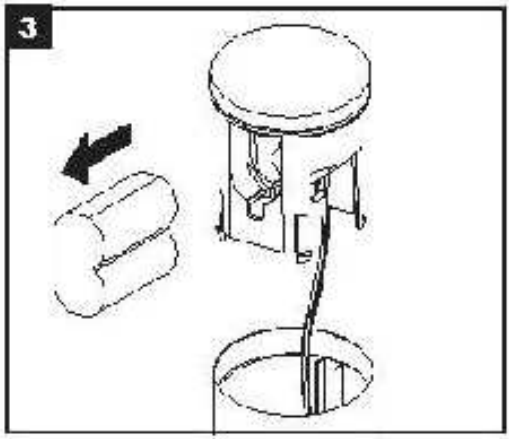


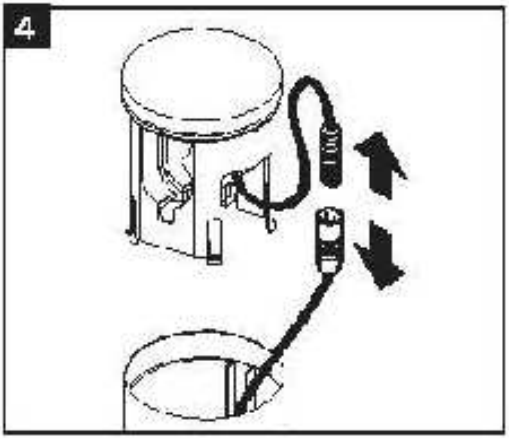


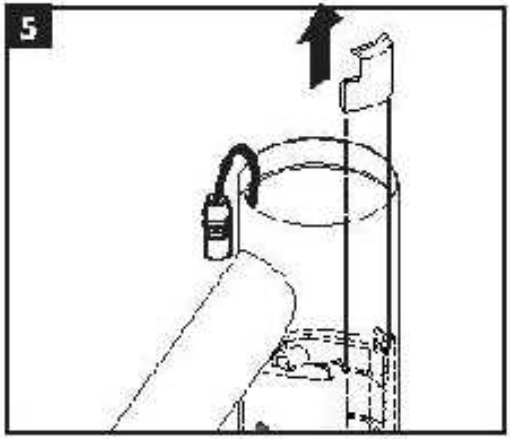

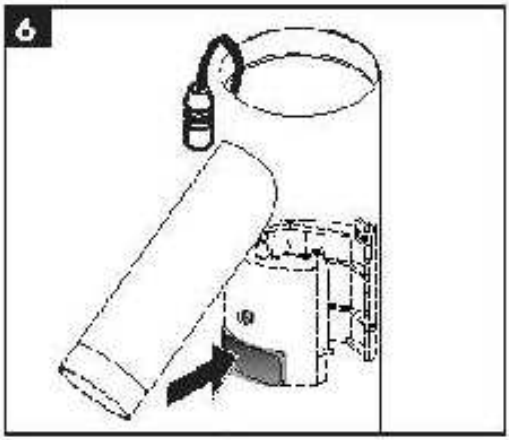
6

7
90°

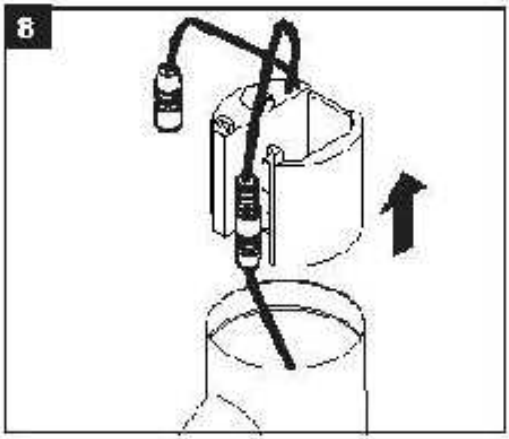
8

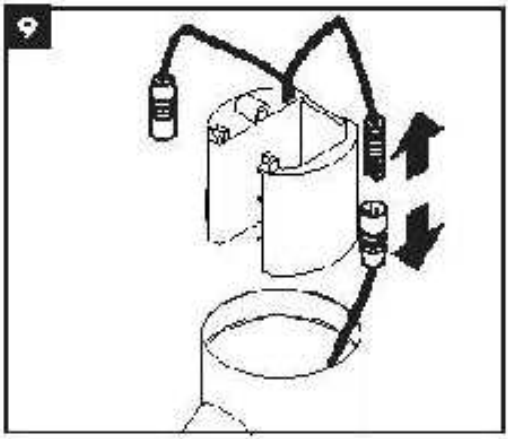
9

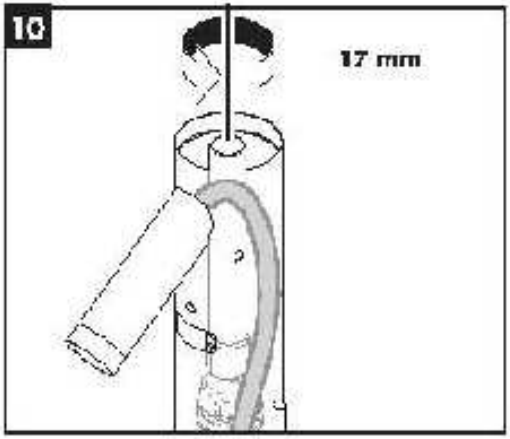
10
17 mm

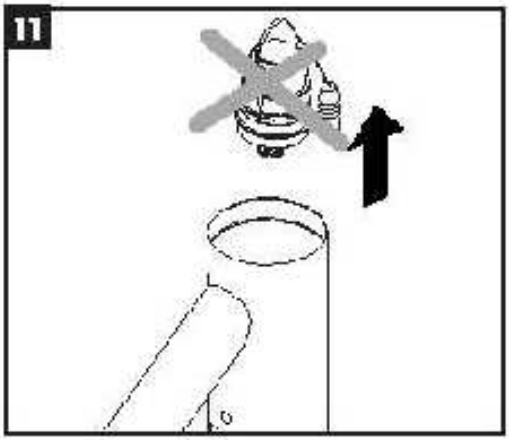
11

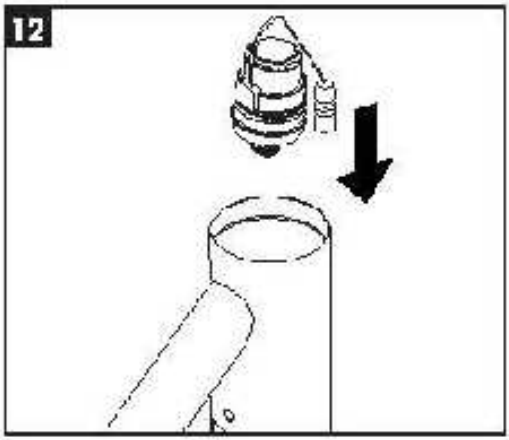
12

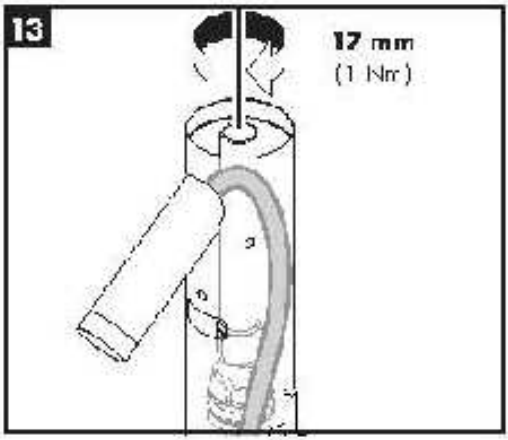
13
17 mm
(1 Nm)

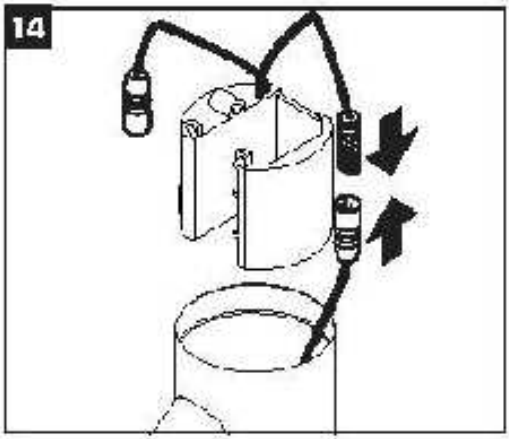
14

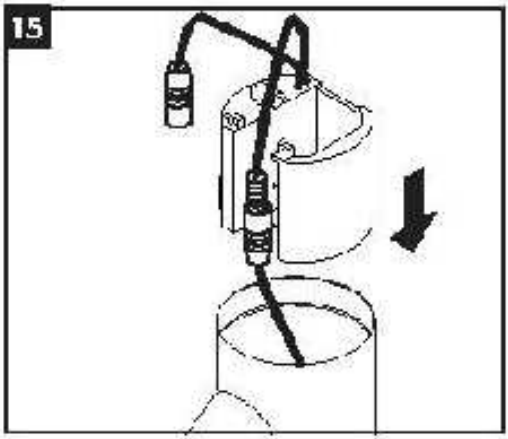
15

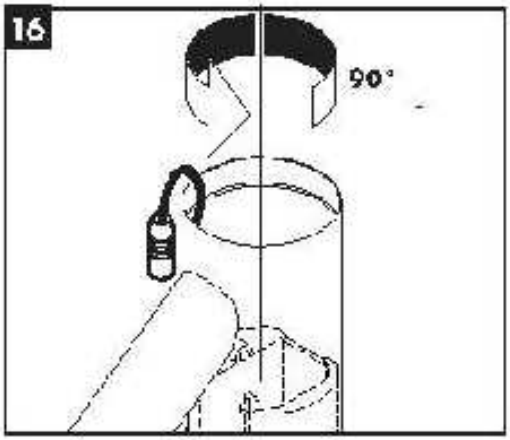
16
90°

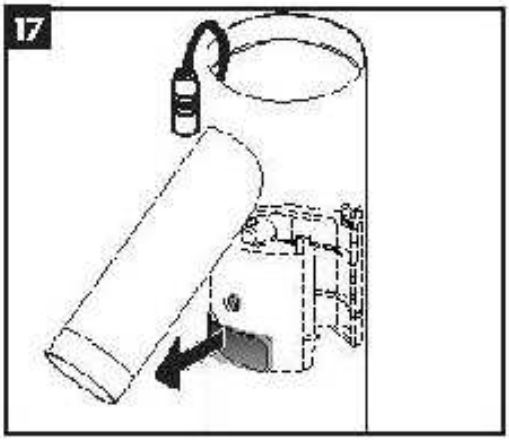
17

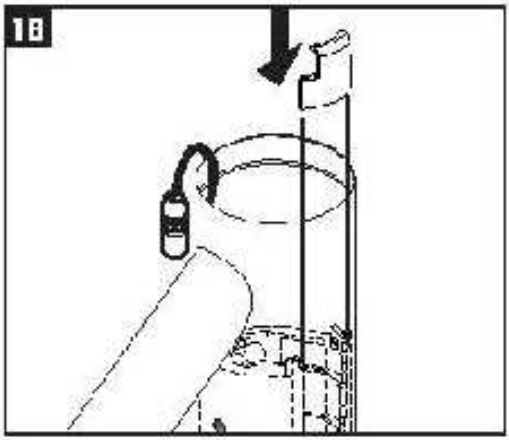
18

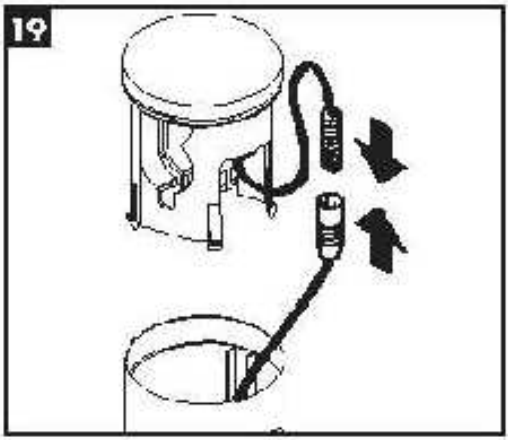
19

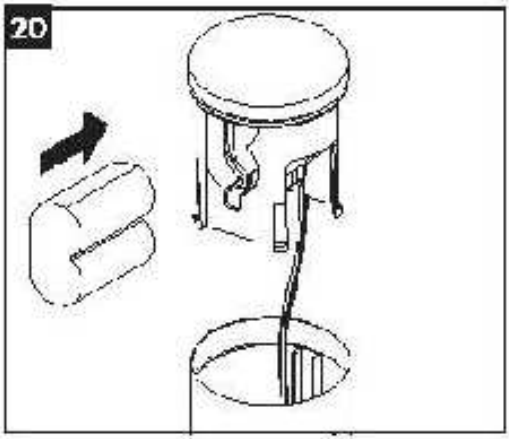
20

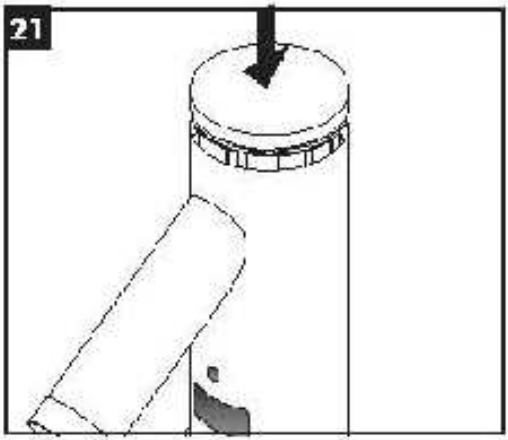
21

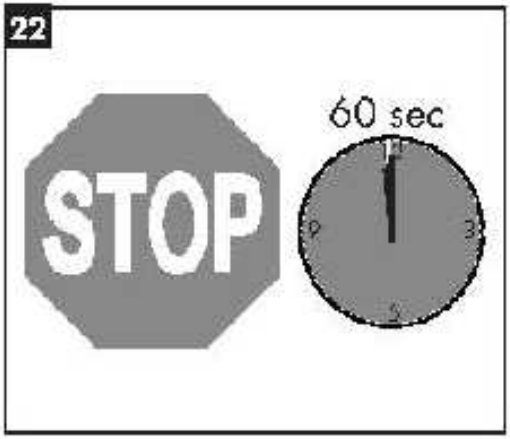
22
STOP
60 sec

**Electronic (6V)**
105 00XX0 / 15101XX0
31100000 / 31101000

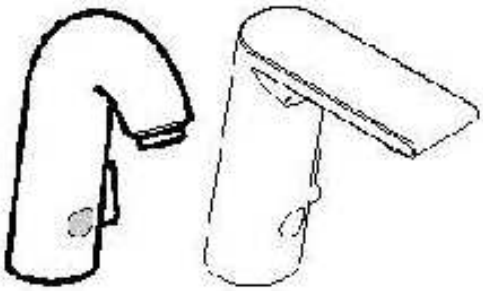

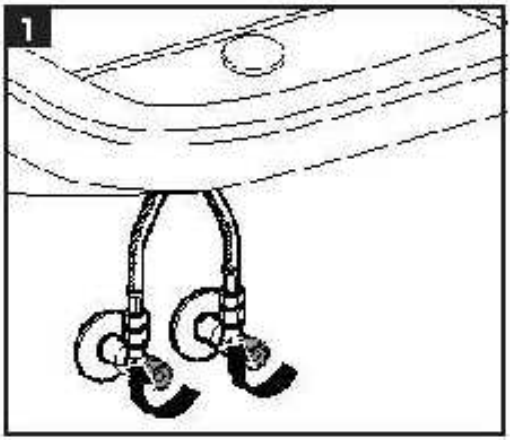


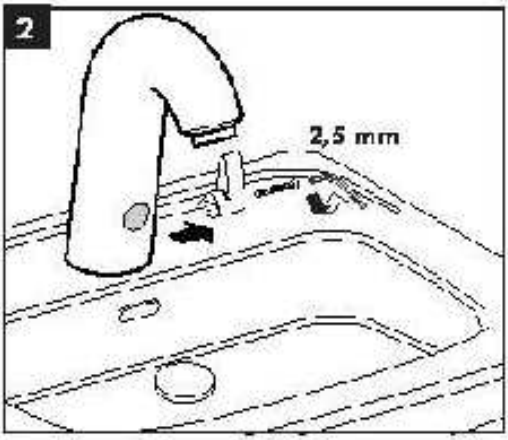


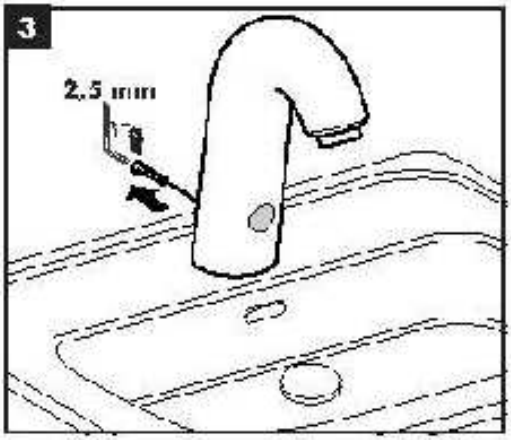


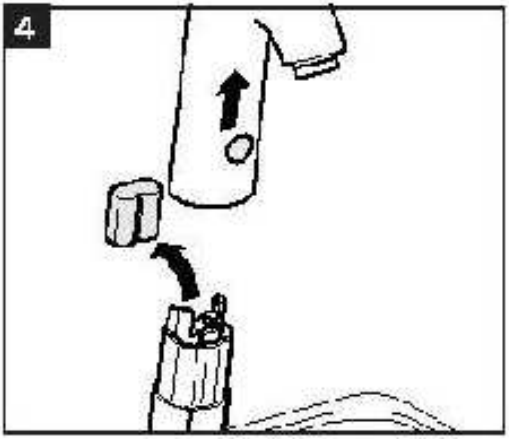


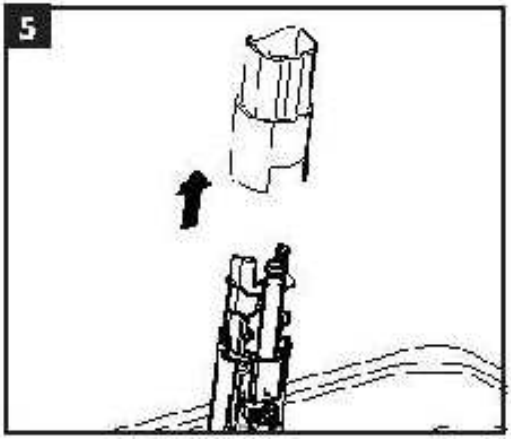

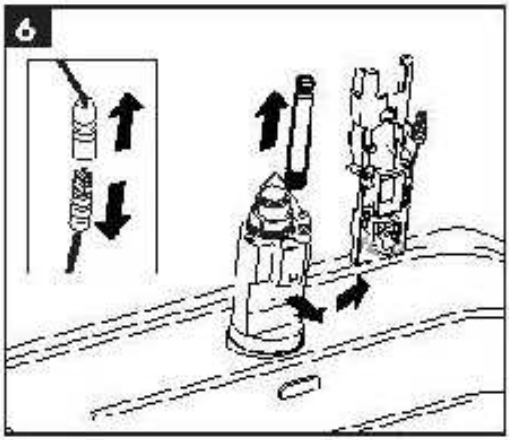
6

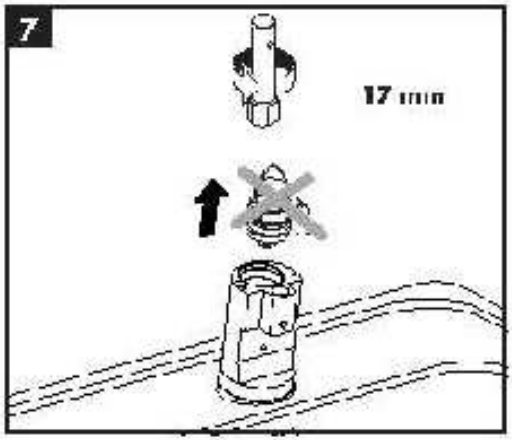
7
17 mm

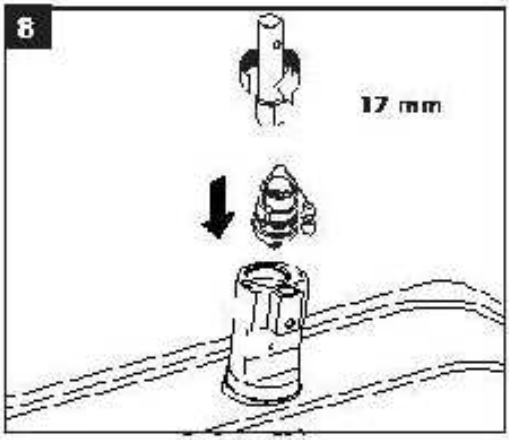
8
17 mm

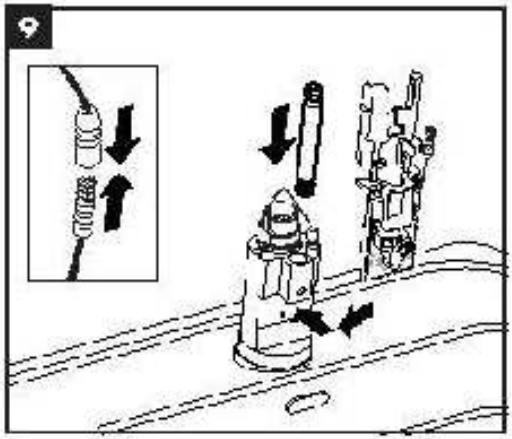
9

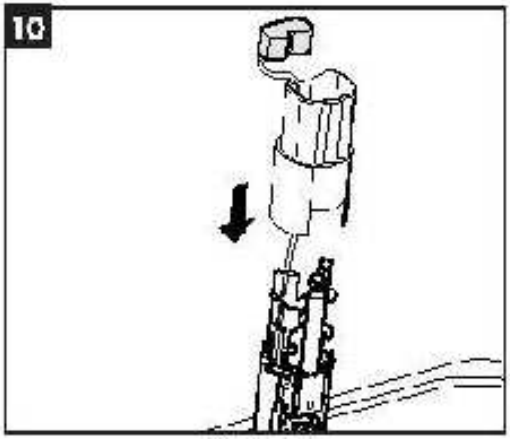
10

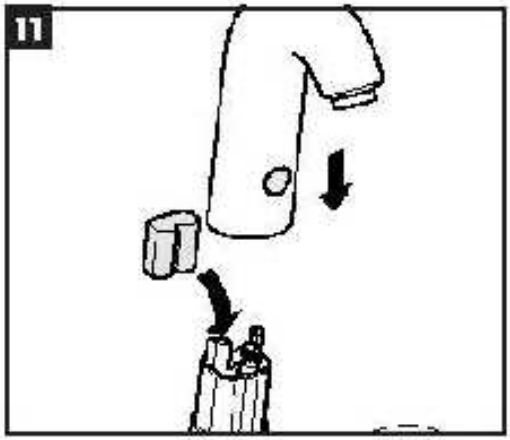
11

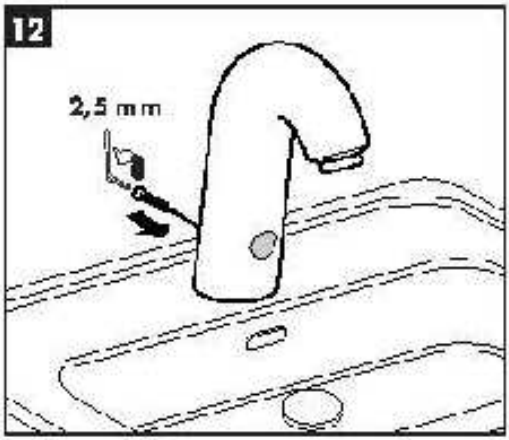
12
2,5 mm

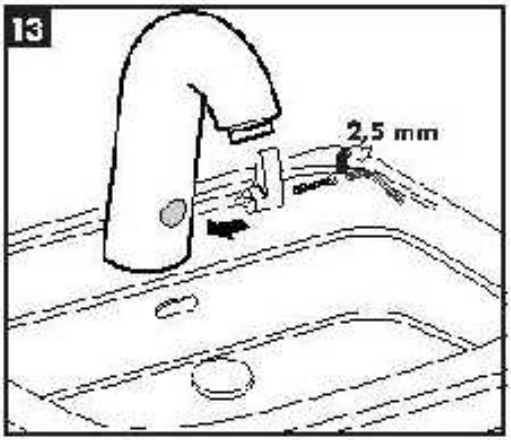
13
2,5 mm

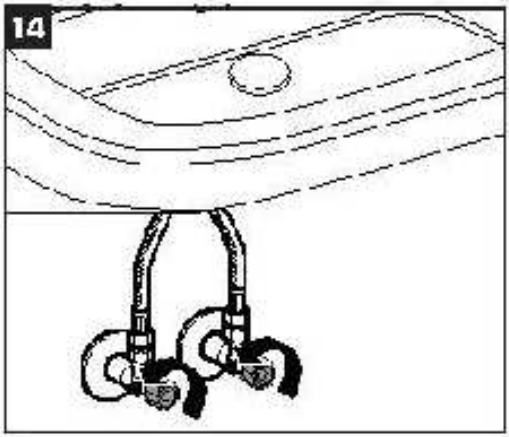
14

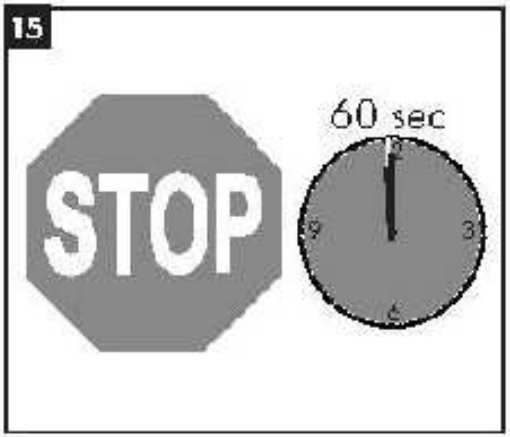
15
STOP
60 sec

**Electronic (9V)**
15180XX0 / 15181XX0
31102000 / 31100000

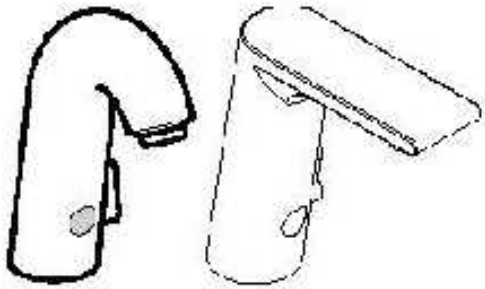

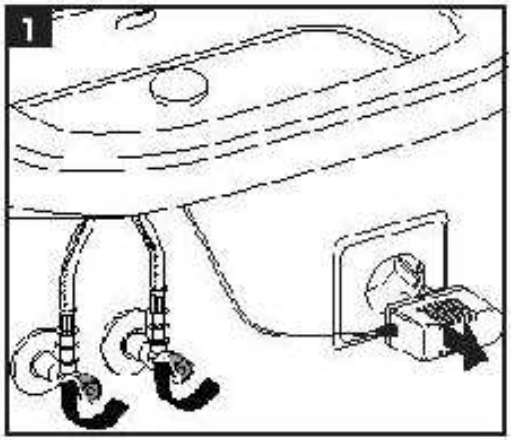


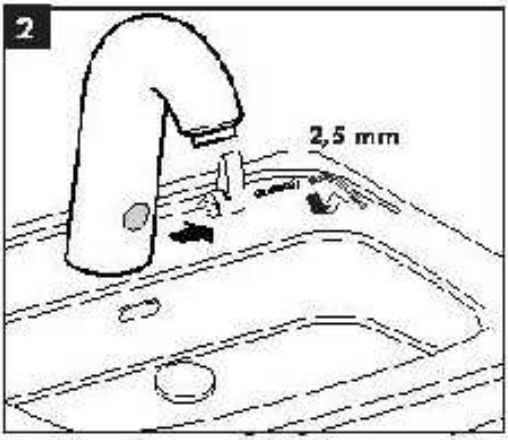


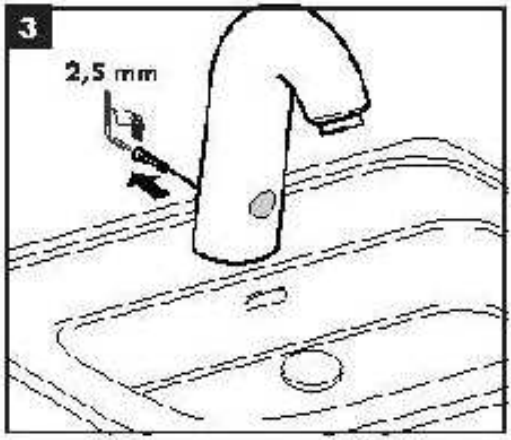


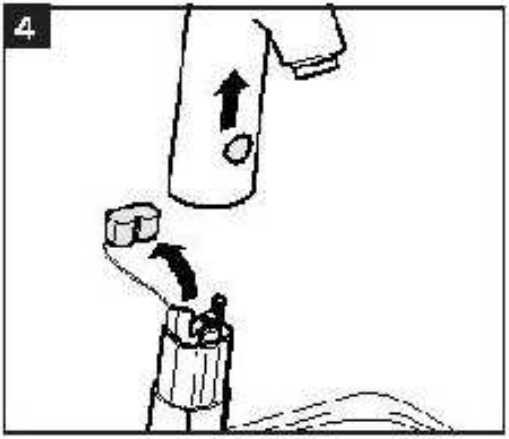


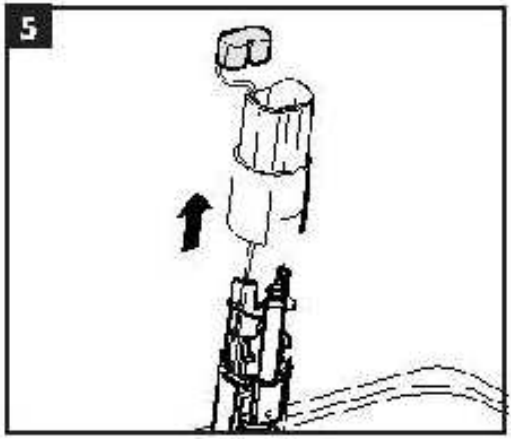

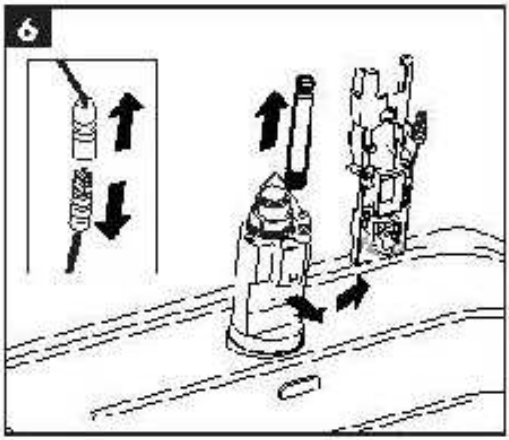
6

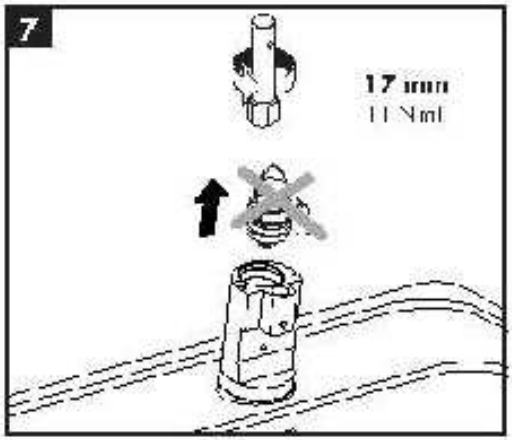
7
17 mm
(1 Nm)

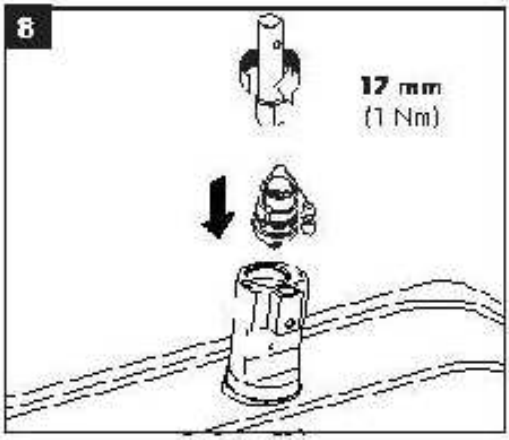
8
17 mm
(1 Nm)

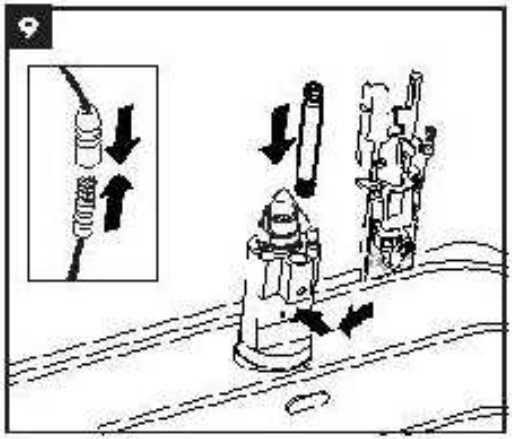
9

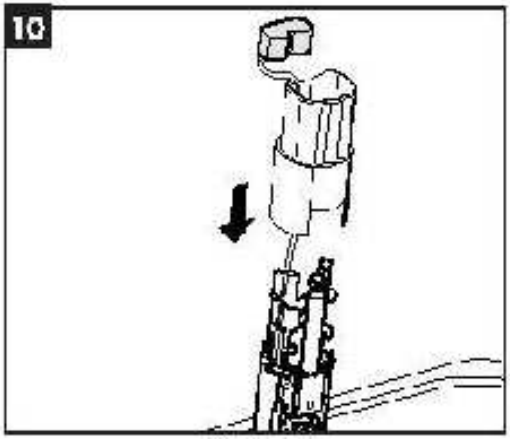
10

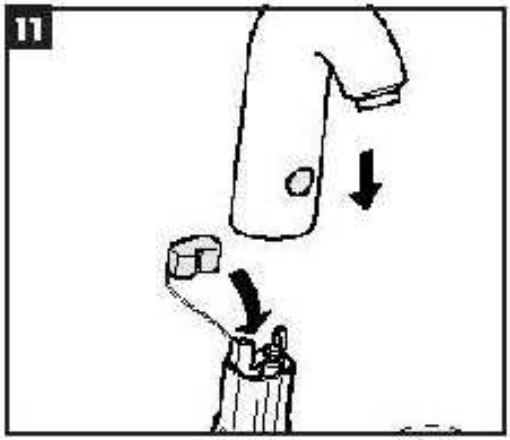
11

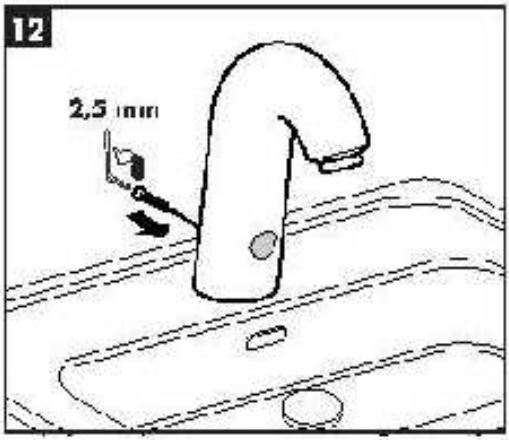
12
2,5 mm

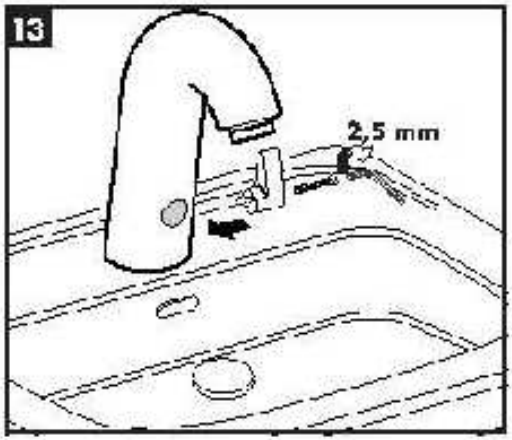
13
2,5 mm

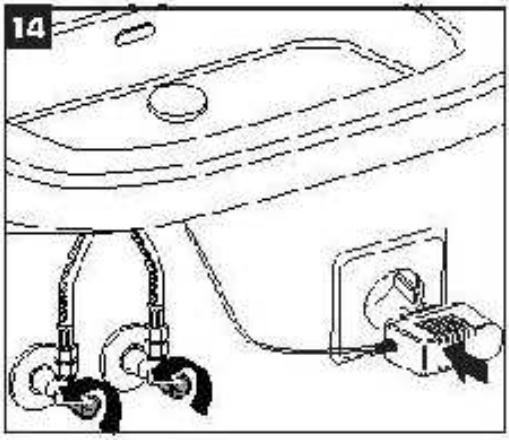
14

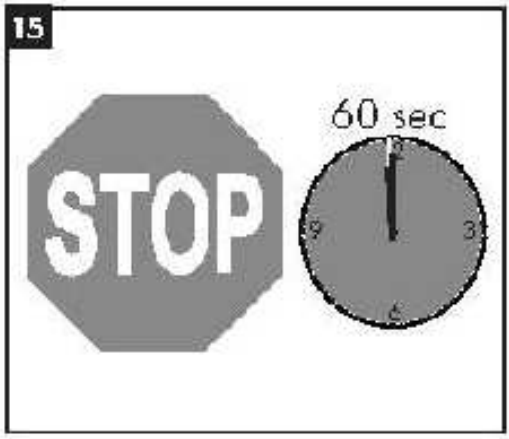
15
STOP
60 sec

**Brausethermostat UP mit elektronischer Start- / Stop-Taste (6 Volt)**
**Thermostatic Mixer with Electronic Start / Stop Button (6 Volt)**
15720000 / 15720800

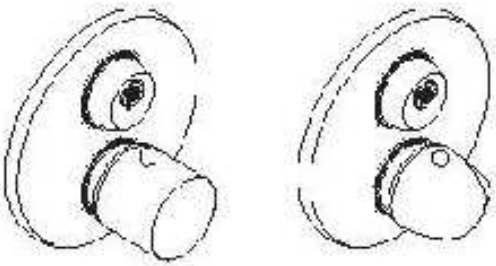

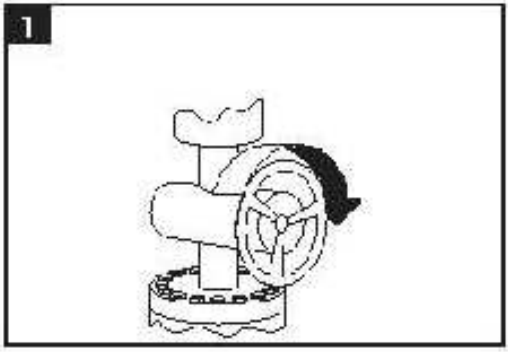


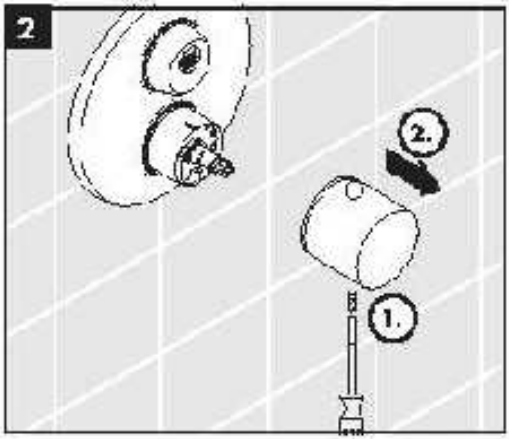


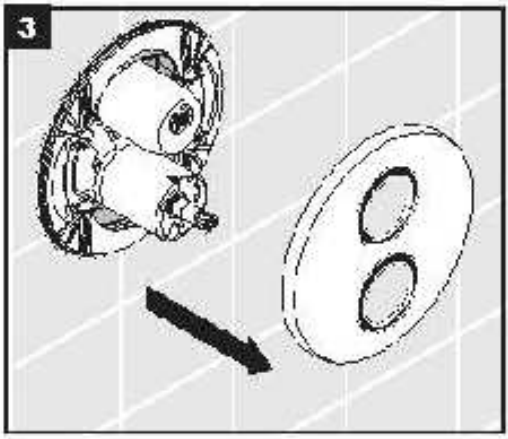


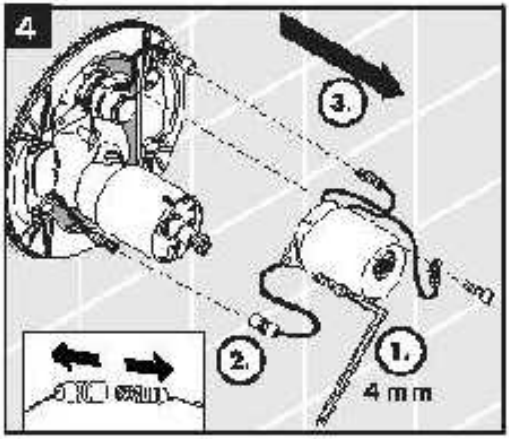


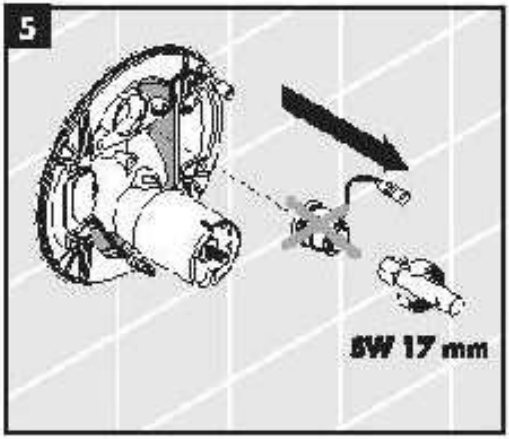

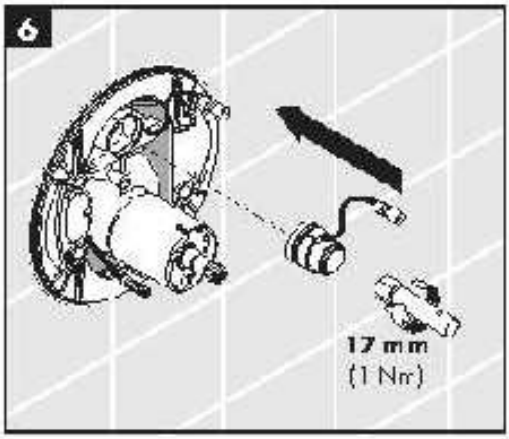
6
17 mm
(1 Nm)

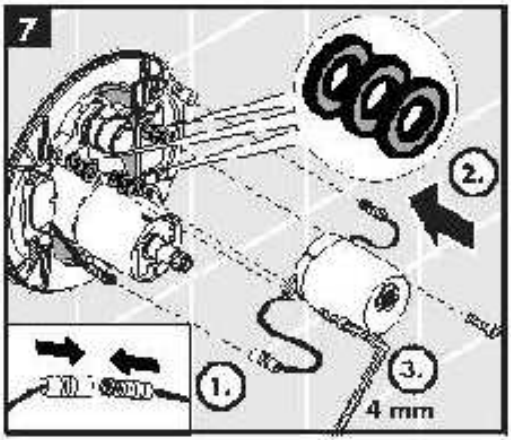
7
2.
1.
3.
4 mm

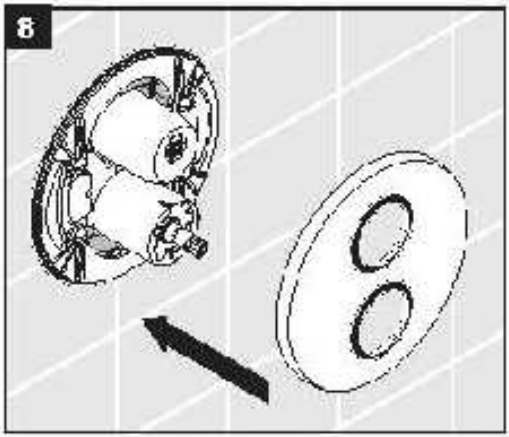
8

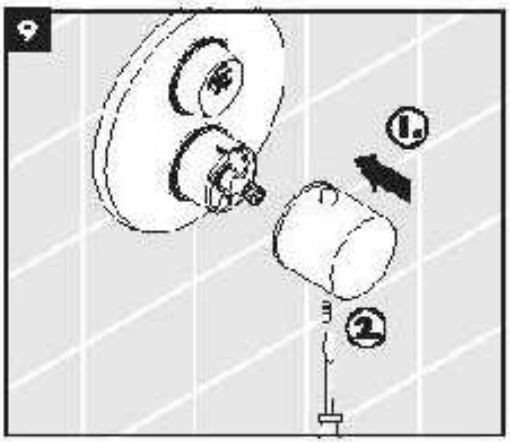
9
1.
2.

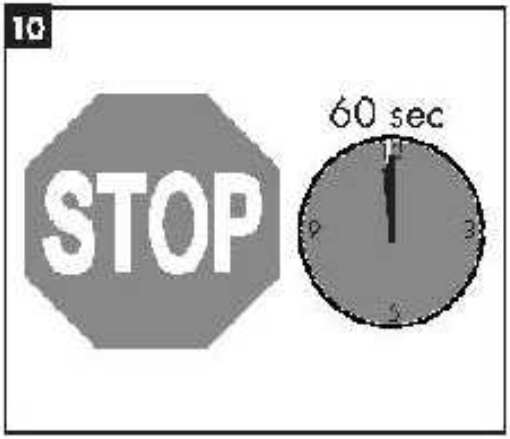
10
STOP
60 sec

1
START
STOP
1 x ca 1 sec.

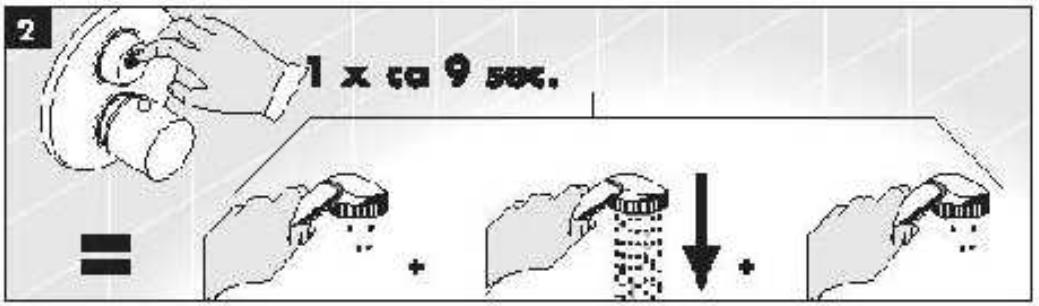
2
1 x ca 9 sec.

max. 3 sec.

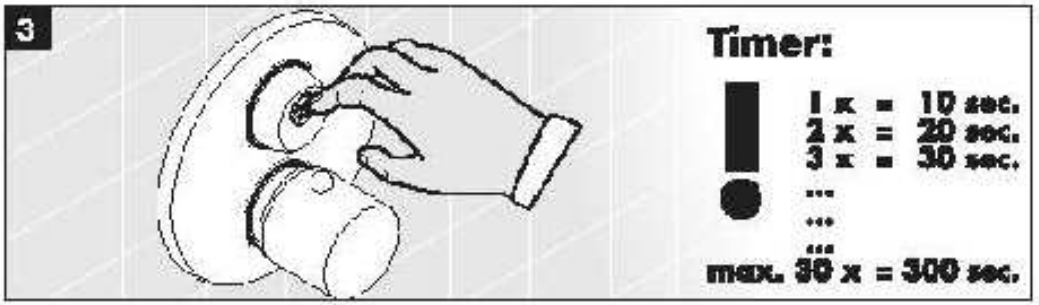
3
Timer:
1 x = 10 sec.
2 x = 20 sec.
3 x = 30 sec.
max. 30 x = 300 sec.

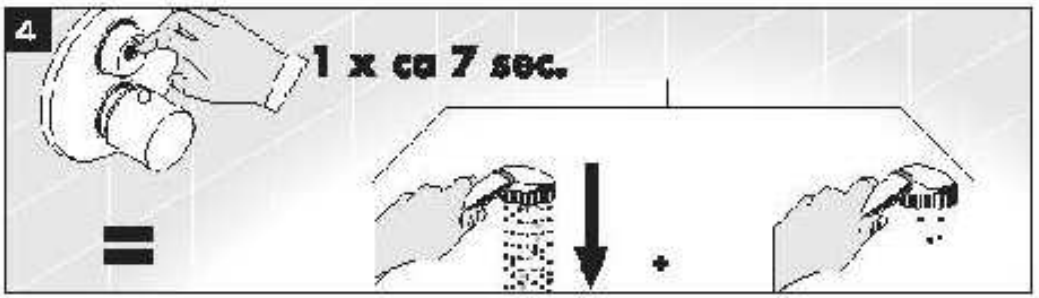
4
1 x ca 7 sec.

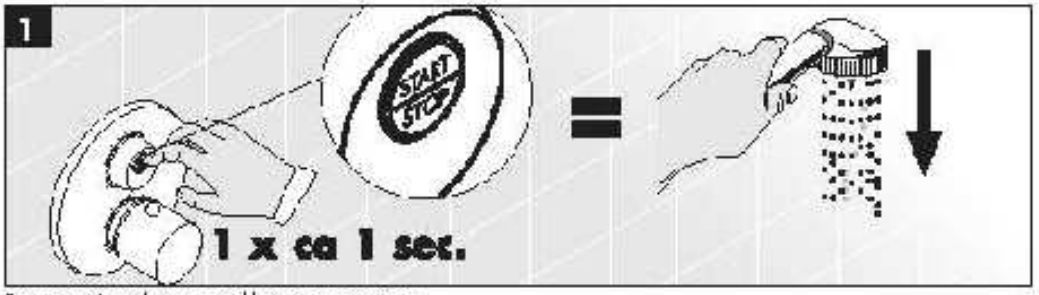


Press start/stop button quickly to activate mixer.

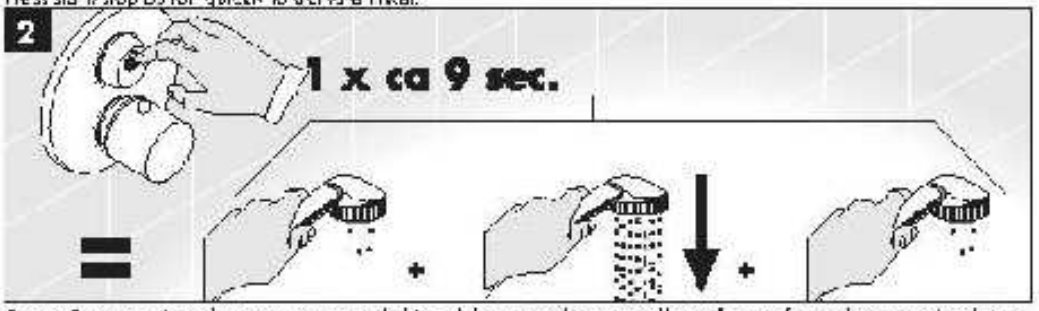


**Start:** Press start/stop button once again, hold until the mixer close by itself, it will start after a short periode of time again and stop once again by itself. Then let of the button.

max. 3 sec.

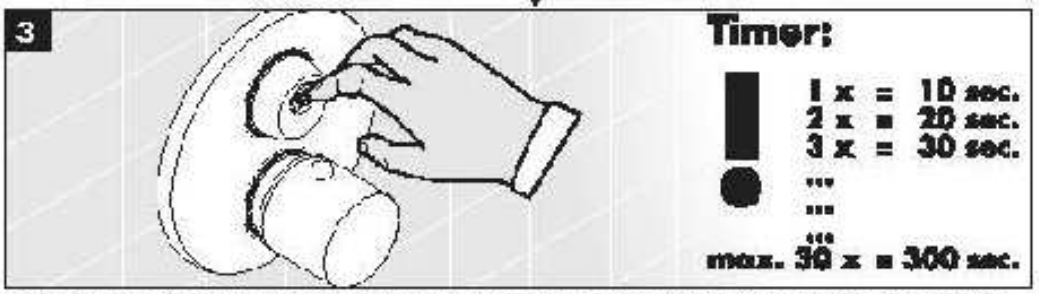


**Programming:** After max. 3 seconds, press the start/stop button several times to increase the shower time. One press is about 10 seconds.

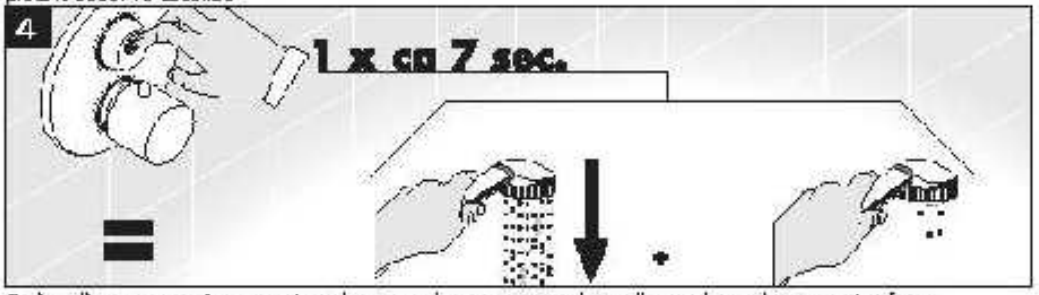


**Quit adjustement:** Press start/stop button until the mixer starts by itself and after a short periode of time it will stop by itself. Then let of the button.

hansgrohe

Hansgrohe Aerstraße 5-9 · D-77761 Schiltach · Telefon +49 (0) 78 36/51-283 · Telefax +49 (0) 78 36/51 1560
E-Mail info@hansgrohe.com · Internet www.hansgrohe.com

07/2025
0 15/49 11

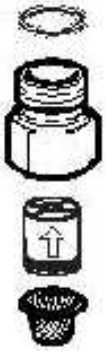

96906000

96573000

hansgrohe

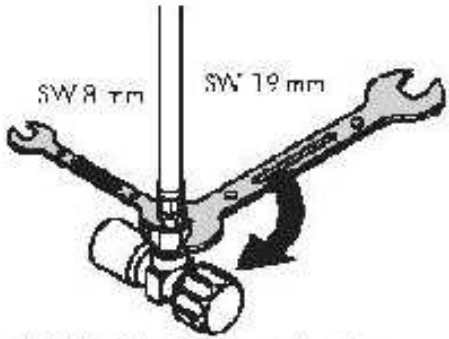

**DE** Die Rückflussverhinderer müssen gemäß DIN 1988 einmal jährlich auf ihre Funktion geprüft werden.

**FR** Les clapets anti-retour doivent être vérifiés une fois par an.

**EN** The non-return valves must be checked once a year.

**IT** Le valvole di non ritorno devono essere controllate una volta all'anno.

**ES** Las válvulas antiretorno se han de revisar una vez al año.

**NL** Het functioneren van de terugslagkleppen moet jaarlijks worden getest.

**DK** Kontraventilen skal gennemses en gang om året.

**PT** As válvulas anti-retorno têm que ser verificadas uma vez por ano.

**PL** Zgodnie z normą DIN 1988 działanie zabezpieczeń przeciwzwrotnego należy sprawdzać raz w roku.

**CS** U jištění proti zpětnému nasátí musí být podle normy DIN 1988 jednou ročně přezkoušena jeho funkce.

**SK** Prípojka proti spätnému nasatiu musí byť podľa normy DIN 1988 raz ročne preskúšaná jej funkčnosť.

**ZH** 每年必须按照DIN 1988标准对回流的功能进行一次检查。

**RU** Клапаны обратного потока должны проверяться на режим один раз в год.

**HU** A visszafolyás gátlók működését a DIN 1988 szerint évente egyszer ellenőrizni kell.

**FI** Vastaventtiilin toiminta on normin DIN 1988 mukaan tarkastettava vuosittain.

**SV** Backventilernas function måste kontrolleras en gång varje år enligt DIN 1988.

**LT** Atbulinių vožtuvėlių funkcija, remiantis DIN 1988, vieną kartą metuose privalo būti patikrinta.

**HR** Nepovratni ventili se moraju provjeravati jednom godišnje prema standardu DIN 1988.

**TR** Geri akış önleyiciler DIN 1988'e göre yılda bir kez çalışma kontrolü yapılmalıdır.

**RO** Supapele antretur trebuie verificate anual conform DIN 1988.

**EL** Οι βαλβίδες αναπαραφής πρέπει να ελέγχονται μια φορά το χρόνο προσηκόντως σύμφωνα με το πρότυπο DIN 1988.

**SL** Delovanja protipovratnega ventila je potrebno vsakoletno preizkusiti v skladu z DIN 1988.

**ET** Tagasilöögiklappide toimimist tuleb kontrollida vastavalt standardile DIN 1988 kord aastas.

**LV** Reizi gadā jāpārbauda pretvārsti atbilstoši DIN 1988.

**SR** Nepovratni ventili se moraju proveravati jednom godišnje prema standardu DIN 1988.

**NO** Tilbakeslagsventiler skal funksjonskontrolleres i henhold til DIN 1988 en gang i året.

**BG** Съгласно DIN 1988 годишно трябва да се проверява функцията на възвратните клапани.

**SQ** Përputhshmëria e rregullores së drejtimit të kundërt të bazë të normës DIN 1988 duhet kontrolluar një herë në vit.

**AR** يجب فحص صمامات عدم الرجوع مرة واحدة في السنة.

hansgrohe

Hansgrohe · Postfach 1145 · 77776 Schiltach · Telefon +49 (0) 7836/51-1282 · Telefax +49 (0) 7836/51-1440
E-Mail: info@hansgrohe.com · Internet: www.hansgrohe.com

11.2001
97.640.881.01

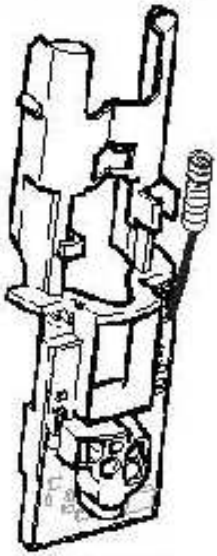

**Electronic**
96905000

**AV-Adapter**
97690000

**Electronic** 15100XXX/151C1XXX

**1**

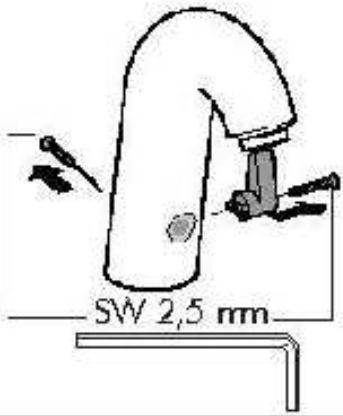


**2**

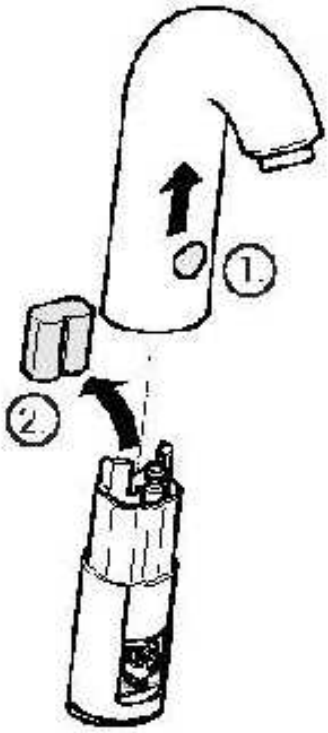


**3**

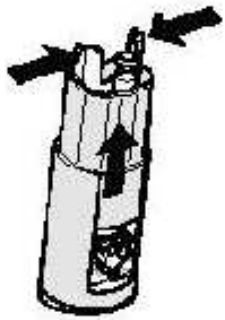

**4**

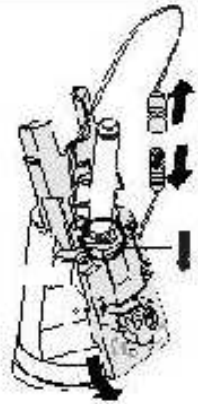

5

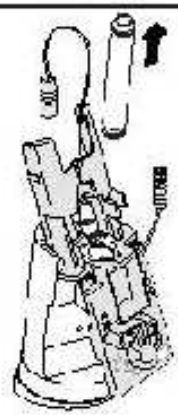

6

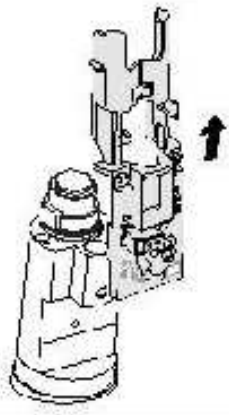

7

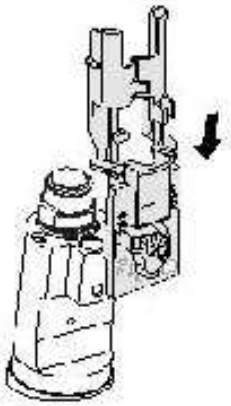

8

9

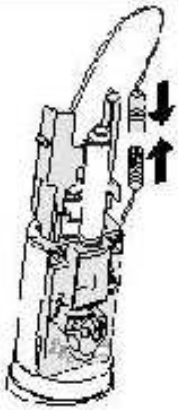

10

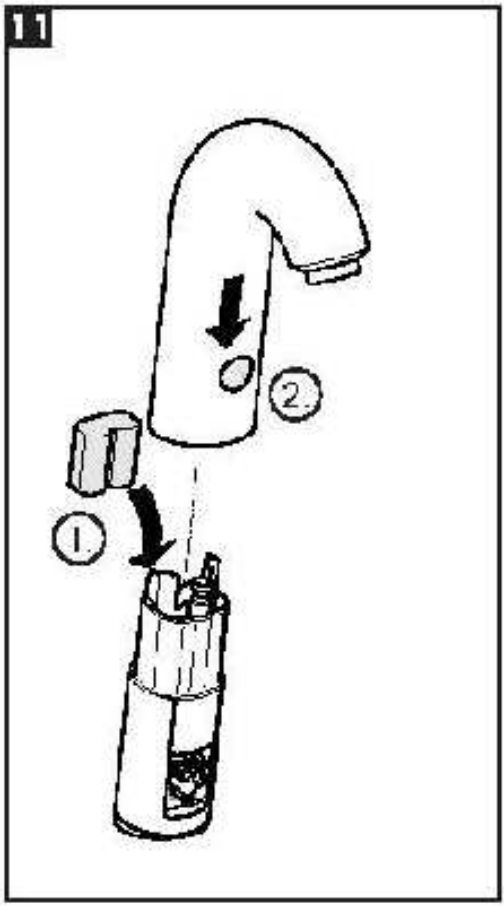


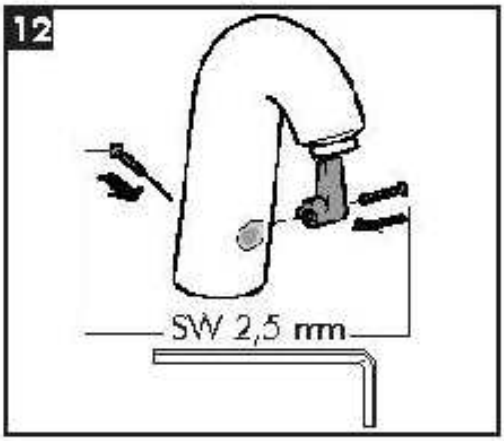


**Achtung:** Nach dem Einsetzen der Batterie darf die Armatur ca. 1 min nicht aktiviert werden. Sie benötigt diese Zeit zur Selbstjustage.

**Attention:** Après mise en place de la pile le mitigeur ne doit pas être utilisé pendant 1 minute environ, temps nécessaire pour l'ajustage automatique de la cellule.

**Attenzione!** dopo aver inserito la batteria il rubinetto non deve essere attivato per circa 1 minuto. Questo periodo di tempo è necessario per l'autoregolazione.

**Attention!** After installing the battery, the mixer must not activated for 1 min because of adjusting itself.

**Atenção!** Depois de colocar a bateria a torneira não deve ser activada durante 1 min. Este tempo é necessário para se auto-ajustar.

**LET OP!** Na het plaatsen van de batterij mag de kraan ca. 1 minuut niet geactiveerd worden. In deze tijd regelt de kraan zichzelf in.

**Bemærk!** Armaturet må først aktiveres 1 min. efter montering af batteriet. Denne tid tager det armaturet at selvjustere elektronikken.

**Electronic** 15180XXX/15181XXX

1

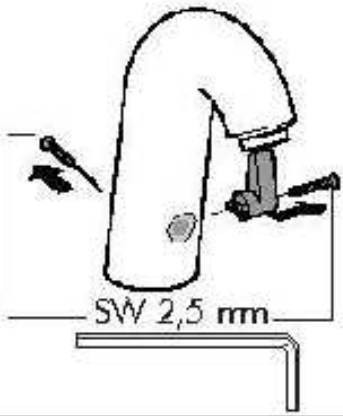


2

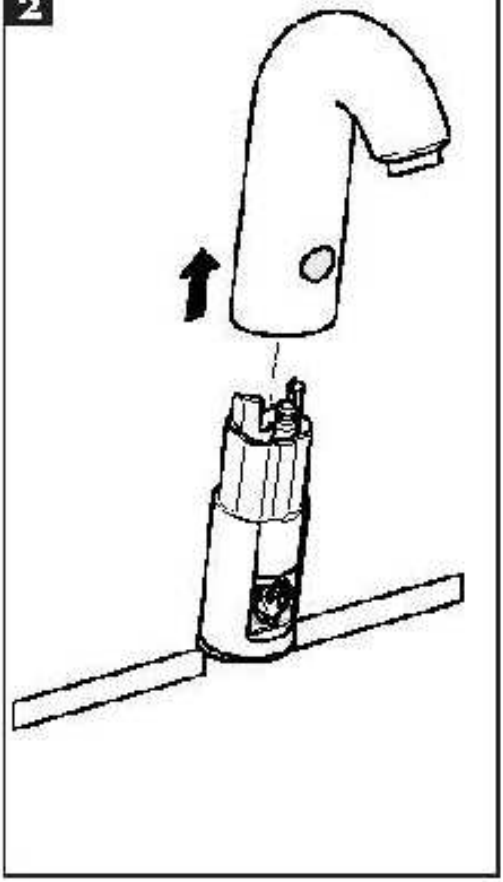

3

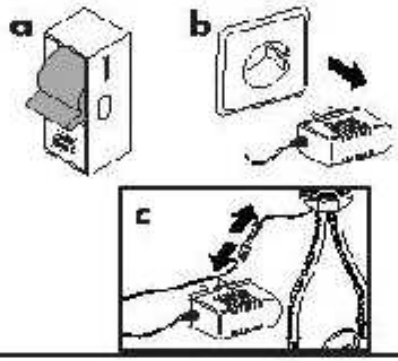


4

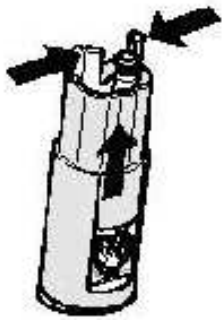

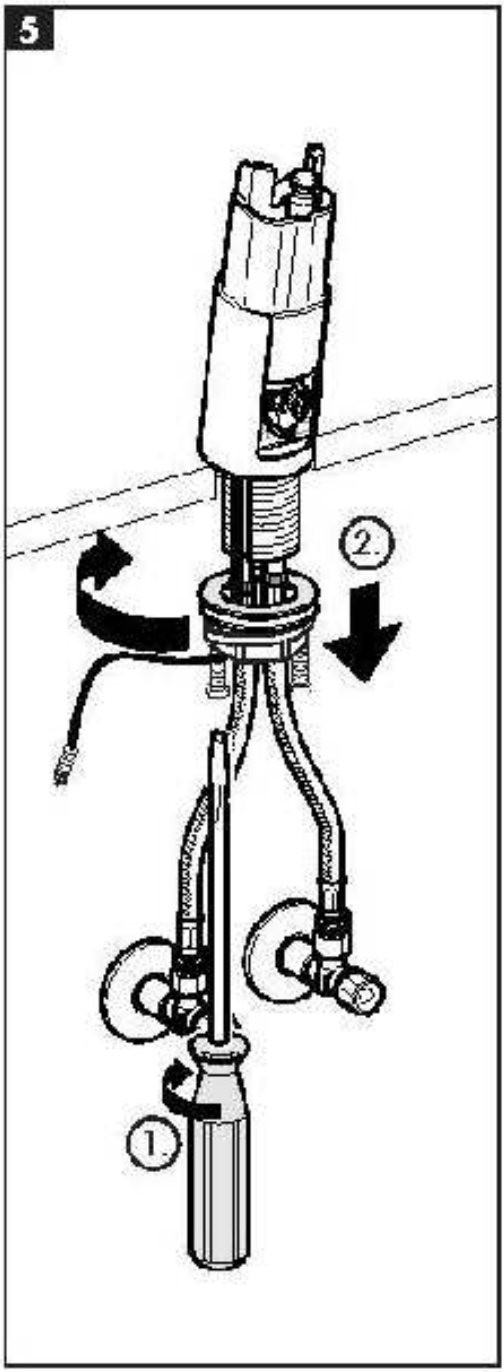
5
2.
1.

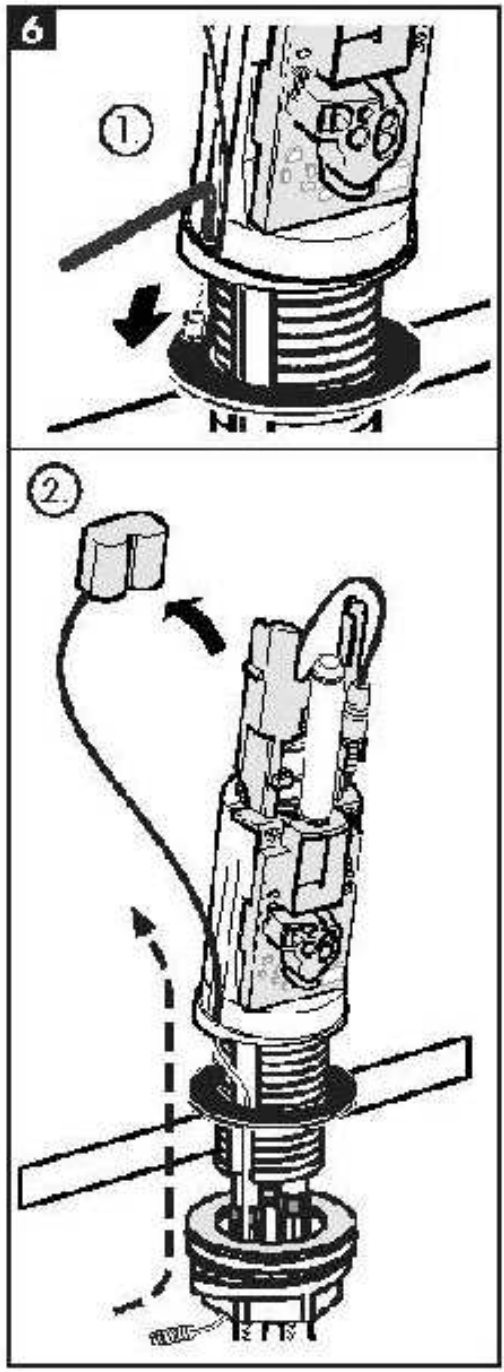
6
1.
2.

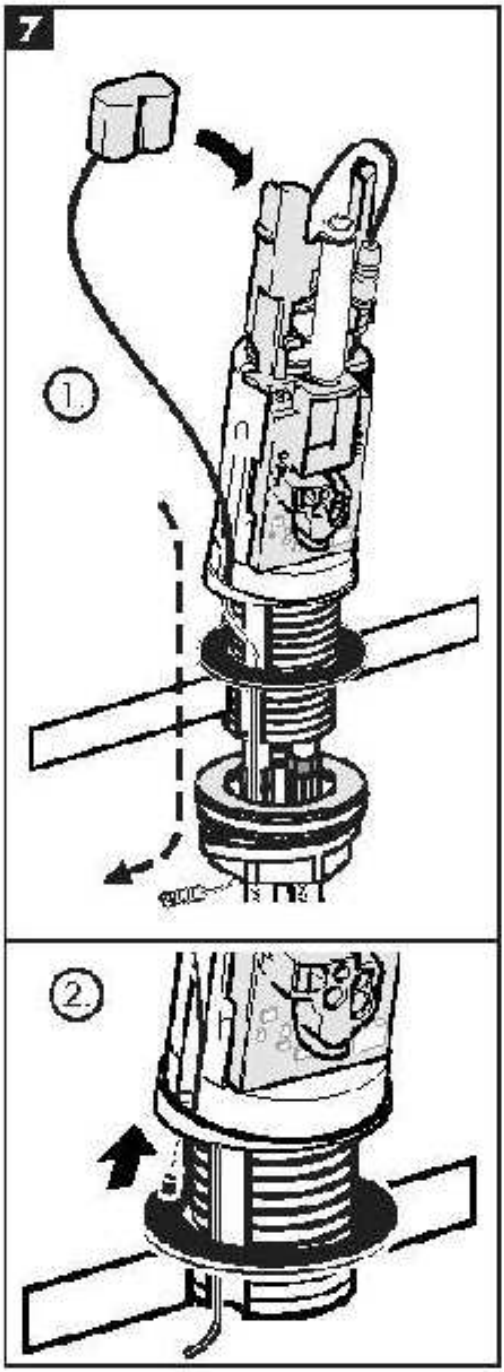
7
1.
2.

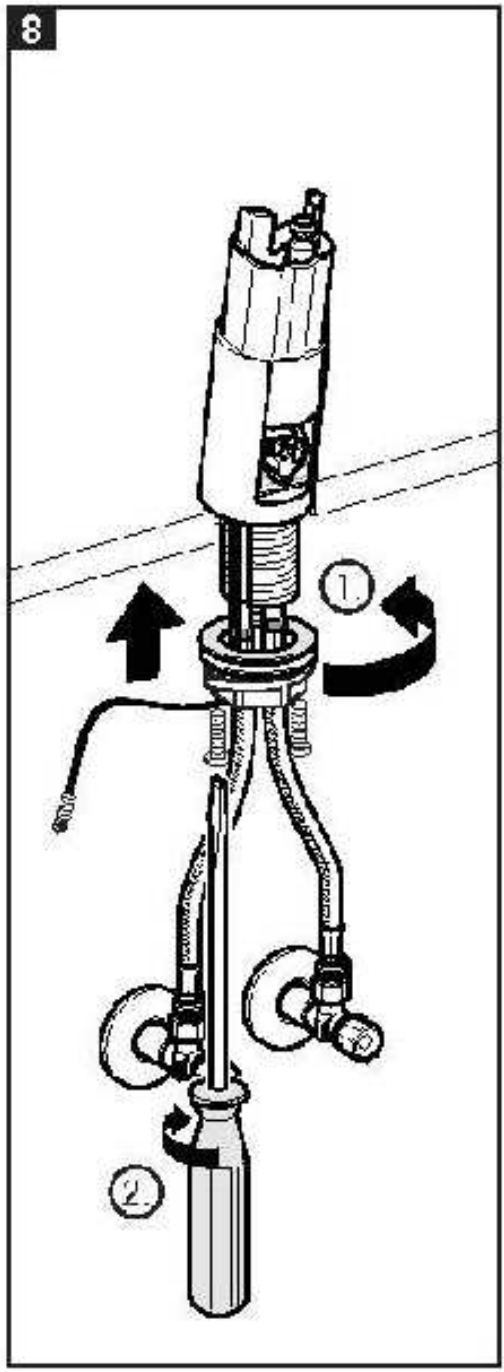
8
1.
2.

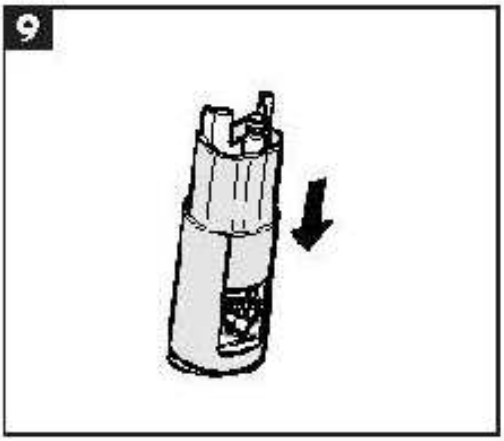


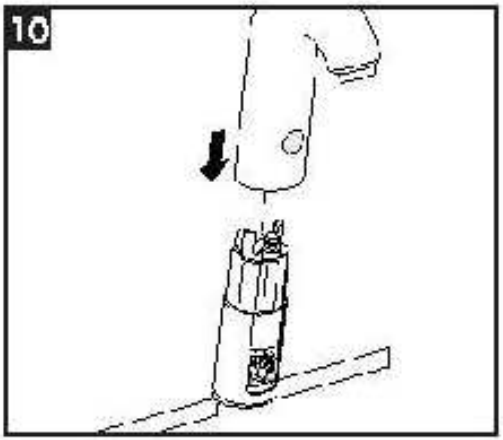


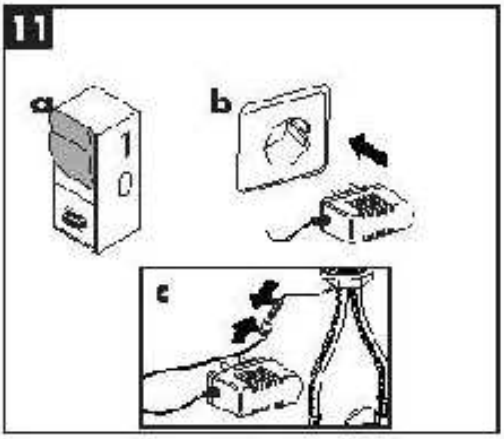


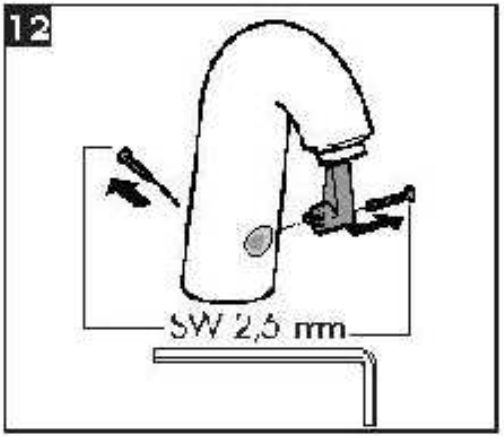


**Achtung!** Nach dem Einsetzen der Batterie darf die Armatur ca. 1 min nicht aktiviert werden. Sie benötigt diese Zeit zur Selbstjustage.

**Attention!** Après mise en place de la pile la mitigeur ne doit pas être utilisé pendant 1 minute environ, temps nécessaire pour l'ajustage automatique de la cellule.

**Attenzione!** Dopo aver inserito la batteria il rubinetto non deve essere attivato per circa 1 minuto. Questo periodo di tempo è necessario per l'autoregolazione.

**Attention!** After installing the battery, the mixer may not activated for 1 min because of adjusting itself.

**Atenção!** Depois de colocar a pilha a misturadora não deve ser activada durante 1 min. Ela necessita deste tempo para se auto ajustar.

**LET OP!** Na het plaatsen van de batterij mag de kraan ca. 1 minuut niet geblokkeerd worden. In deze tijd regelt de kraan zichzelf in.

**Bemærk!** Armaturet må først aktiveres 1 min. efter montering af batteriet. Denne tid tager det armaturet at selvjustere elektronikken.

hansgrohe
AXOR | PHARO
Hansgrohe · Postfach 1145 · D-77761 Schiltach · Telefon +49 (0) 7836 51-0 · Fax +49 (0) 7836 51-1460
E-Mail: info@hansgrohe.com · Internet: www.hansgrohe.com

11/2006
V02.678.01

# Service

***Metris S***
98612000

hansgrohe

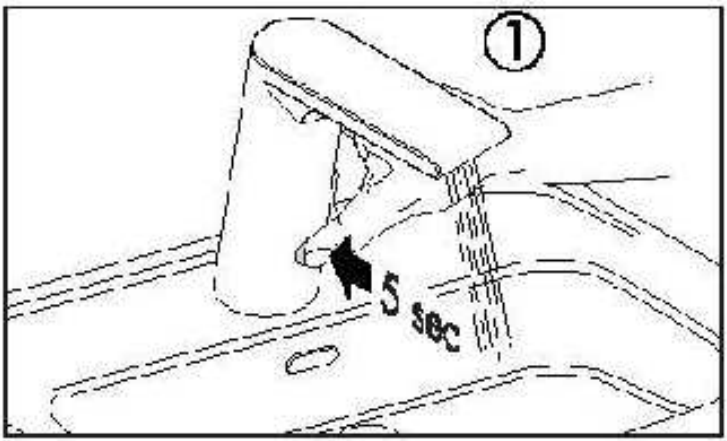


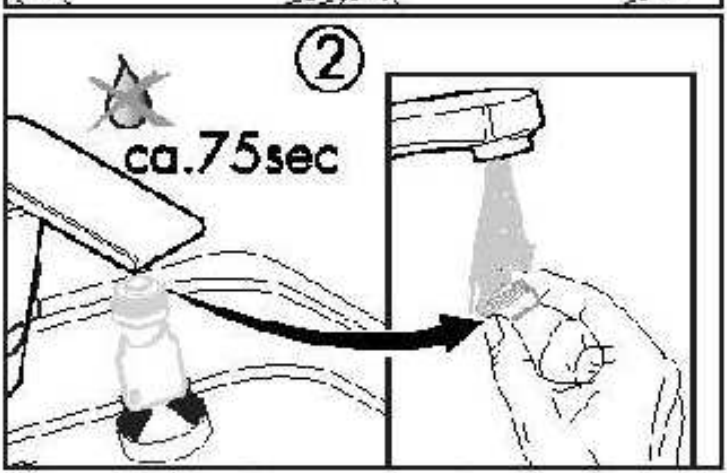


ANDIS | PRÄRO
Hansgrohe · Postfach 1145 · 0-77776 Schiltach · Telefon +49 (0) 78 36/51-1 28 5 · Telefax +49 (0) 78 36/511440
E-Mail: info@hansgrohe.com · Internet: www.hansgrohe.com

5/2026
2.04610 01

# Service

hansgrohe

98749000

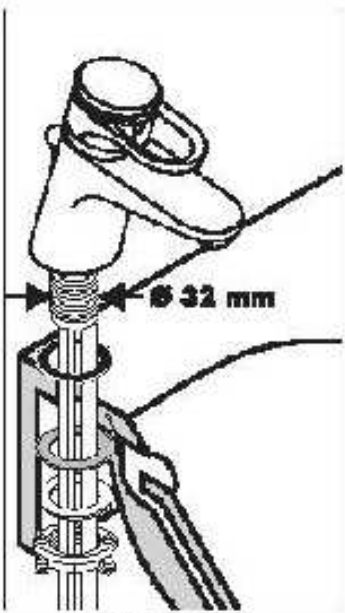


13961000

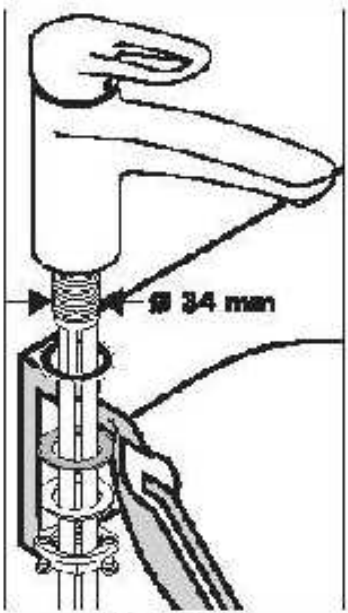


95049000

hansgrohe
Hansgrohe · Postfach 11 45 · D-77761 Schiltach · Telefon +49 (0) 78 36/51-0 · Telefax +49 (0) 78 36/51 13 80
E-Mail: info@hansgrohe.com · Internet: www.hansgrohe.com
8/2001
0.09711.01

# Service

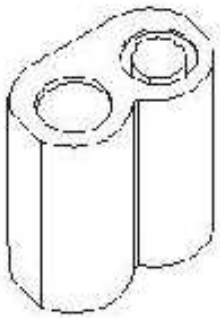

**Batterie Lithium CR-P2/6V**
97999000

hansgrohe

**DE** Nach dem Einsetzen der Batterie darf die Armatur ca. 1 min nicht aktiviert werden. Sie benötigt diese Zeit zur Selbstjustage.

**FR** Après mise en place de la pile, le mitigeur ne doit pas être utilisé pendant 1 minute environ, temps nécessaire pour l'ajustage automatique de la cellule.

**EN** After installing the battery, the mixer may not be activated for 1 min. Because of adjusting itself.

**IT** dopo aver inserito la batteria il rubinetto non deve essere attivato per circa 1 minuto. Questo periodo di tempo è necessario per l'autoregolazione.

**ES** Una vez introducida la batería no accionar la grifería unos aprox. 1 minuto, para permitir que se autoajuste.

**NL** Na het plaatsen van de batterij mag de kraan ca. 1 minuut niet gebruikt worden. In deze tijd regelt de kraan zichzelf in.

**DK** Armaturet må først aktiveres 1 min. efter montering af batteret. Denne tid tager det armaturet at selvjustere elektronikken.

**PT** Depois de colocar a pilha a misturadora não deve ser activada durante 1 min. Ela necessita desse tempo para se auto-ajustar.

**PL** Po użyciu akumulatora armatury nie można aktywować przez ok. 1 min. Ten czas potrzebny jest do jego autokalibracji.

**CS** Po instalaci baterie nesmíte armaturu po dobu cca 1 min. aktivovat. Tuto dobu potřebuje k vlastnímu nastavení.

**SK** Po nainštalovaní batérie sa nesmie aktivovať asi 1 min. Tento čas potrebuje vlastné nastavenie.

**ZH** 注意：安装电池后，龙头由于自行调节，可能不会启动。

**RU** После установки батареи электронные смесители не сразу могут быть активированы в течение ок. 1 мин. Это время требуется для самонастраивания.

**HU** az elem behelyezését követően a csaptelep kb. 1 percig nem aktiválható. Erre az időre az önbeállításhoz van szüksége.

**FI** patterin asentamisen jälkeen hanan saa aktivoida vasta 1 minuutin kuluttua. Tämä aika tarvitaan itsesäätöön.

**SV** När batteriet satts i får armaturen inte aktiveras på cirka en minut. Det behöver tiden för självjustering.

**LT** dėję bateriją, maišytuvo negalima apie 1 minutės laiko jo vidinei reguliuotei.

**HR** Nakon umetanja baterije armatura se smije aktivirati tek nakon 1 minute jer je toliko vremena potrebno za samopodešavanje baterije.

**TR** Bataryanın yerleştirilmesinden sonra, armatür yaklaşık 1 dakika boyunca devreye sokulmamalıdır. Otomatik ayar için bu süre gereklidir.

**RO** După montarea bateriei, instalaţia nu trebuie utilizată aprox. 1 minut, timp necesar pentru efectuarea autoreglării.

**EL** Μετά την τοποθέτηση της μπαταρίας, η βάνα δεν επιτρέπεται να ενεργοποιηθεί για περ. 1 λεπτό, καθώς χρειάζεται αυτό το χρόνο για την επαναρύθμιση.

**AR** بعد تركيب البطارية لا يجب تشغيل الخلاط لمدة دقيقة واحدة تقريبا لأن هذا الوقت ضروري لضبط الخلية.

**SL** Po vstavitvi baterije armatura ca. 1 min ne smete aktivirati. Potrebuje čas, da se samonastavi.

**ET** pärast patarei sisestamist ei tohi segistit ca. 1 min kasutada. see tuleneb tolmuautomaatsüsteemist.

**LV** Pēc bateriņas ievietošanas armatūru nevar ieslēgt apm. 1 min. aktivizēt. Šis laiks ir nepieciešams pašregulācijai.

**SK** Nakon postavljanja baterije, armaturu ne smije biti aktivirana na manje 1 minut, jer joj je potrebno vrijeme za samopodešavanje.

**NO** Etter innsetting av batteriet skal armaturen ikke brukes i omtrent 1 minutt. Denne tiden trengs for selvjusteringen.

**BG** След поставяне на батерията арматурата не бива да се активира за прибл. 1 мин. Това време е необходимо за самонастройване.

**SR** Posle umetanja baterije, armatura ne sme biti aktivirana na manje 1 minut, jer joj je potrebno vreme za samopodešavanje.

13100000 /
13101000

31100000 /
31101000

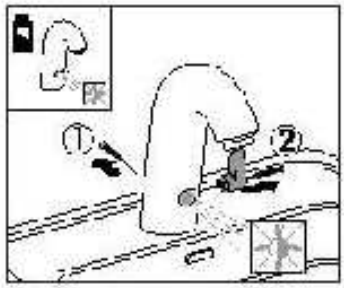

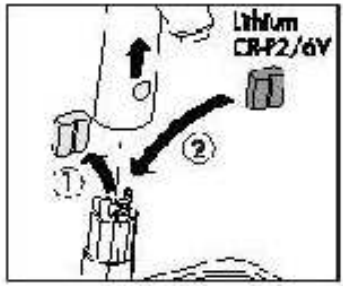


15170000 /
15171000

31100000 /
31101000

31171000 /
31172000

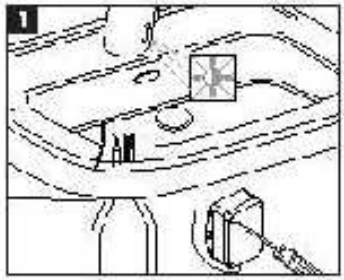


10170000 /
10175000

32110000 /
32111000

10100000 /
10104000

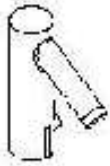

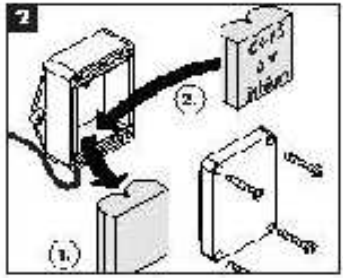

10100800 / 10105800

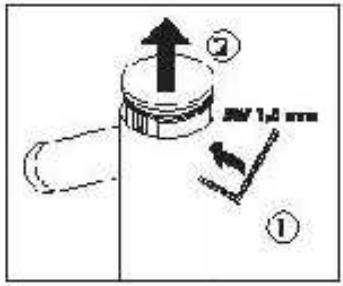


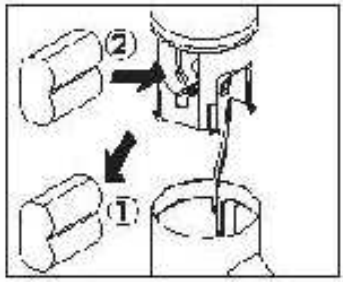


15740XXX

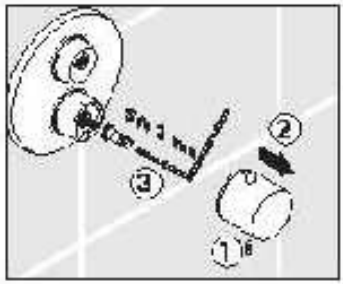


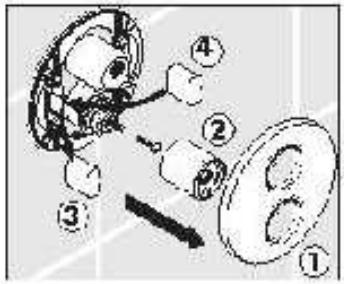



hansgrohe

Hansgrohe · Postfach 1145 · D-77751 Schiltach · Telefon +49 (0) 78 36/5 - 282 · Telefax +49 (0) 7836/511440
Email: info@hansgrohe.com · Internet: www.hansgrohe.com



11/2011

Service

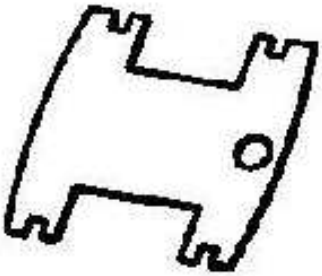

93606000

hansgrohe

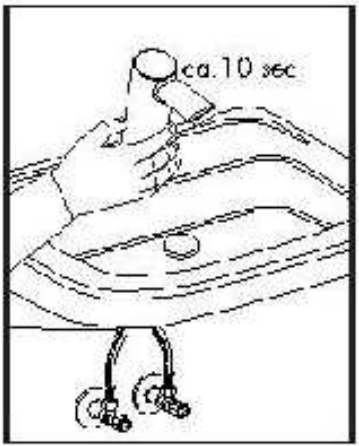


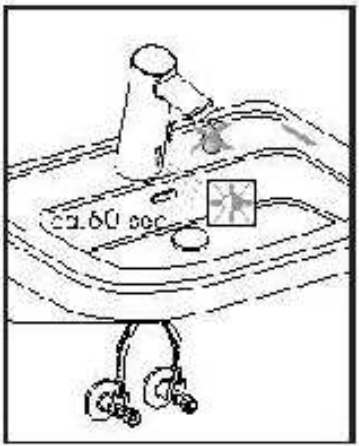


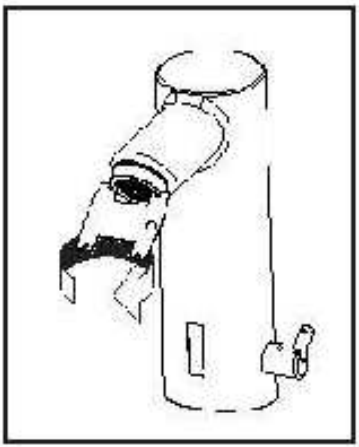

hansgrohe

Hansgrohe 21 · Hans-Grohe-Str. 1 · 9-1 · 77761 Schiltach · T +49 (0) 78 36/51-1586 · F +49 (0) 7836/511360

E-Mail info@hansgrohe.com · Internet www.hansgrohe.com

UE/VUU/
9C44E001

## Cleaning Recommendation for Hansgrohe Products

Today, modern sanitary and kitchen tapware, showers, accessories, washstands, sinks, tubs and radiators consist of very different materials to comply with the needs of the market with regard to design and functionality.

To avoid damage and discolorations, it is necessary to consider certain criteria when cleaning.

### With regard to caring for the Hansgrohe products, the following must in principle be heeded:

- Only use cleaning material which is explicitly provided for this type of application.
- Never use cleaning materials, which contain hydrochloric acid, formic acid, concentrated caustic soda, chlorine bleach or acetic acid, as they cause considerable damage.
- Phosphorous acid bi cleaners are only conditionally applicable.
- Mixing cleaning agents is not permitted, generally.
- Never use cleaning materials or appliances with an abrasive effect, such as universal cleaning powders, sponge pads or microfibre cloths.
- The safety instructions of the cleaning agent manufacturers must be strictly followed.
- Cleaning has to be carried out with a specific cleaner dosage, contact time, object related and adapted to the needs.
- The building up of calcifications has to be removed by cleaning regularly.
- When using spray cleaners, spray the cleaning solution onto a soft cloth or sponge, never directly onto the Hansgrohe products, as the atomized spray could enter openings and gaps in the Hansgrohe products and cause damage.
- After cleaning rinse thoroughly with clean water to remove any cleaner residue.
- Leave the WC seat and lid folded up as long as the flushing process continues or there are stronger cleaning agents in the WC bowl.
- The use of steam cleaners is not permitted. The high temperatures can damage the products.

### Cleaning bathroom furniture

- For gentle cleaning of bathroom furniture, we recommend a clean, soft, damp cloth, yet no microfibre cloth! Spilled substances should be removed immediately. Persistently adhesive stains (grease, cosmetics, etc.) can be removed without leaving any residue using 1% soapy water or washing-up liquid. Then rub the surface dry. Make sure that no drip residue remains on the edges and backs. As a general rule, do not use scouring agents or care products containing alcohol to care for high gloss surfaces.
- High gloss surfaces harden completely within 3 weeks after removing the protective film. Please handle with special care during this period and do not clean or wipe.

### Cleaning mirrors

- Switch off light.
- Remove marks (grease, cosmetics, etc.) with a chamois leather that has been rinsed in hot water and wrung out well. Be sure to remove drip residue from edges with a soft, dry cloth. Do not use glass or window cleaner or other chemicals, as these may damage the silver coating and cause stains. We cannot accept liability or provide guarantee cover if these instructions are ignored.
- Wipe surface with a soft, dry or damp cloth.
- Ensure no moisture is held into the light.
- A mirror fogged with water vapour should be dried as quickly as possible by rubbing it down or drying it systematically.
- Damage caused by using incorrect cleaners or misuse is not covered by our guarantee.

### Important

Residues of toiletries such as liquid soaps, shampoos and shower gels, hair dyes, perfumes, aftershave and nail varnish can also cause damage.

Hands must carefully rinse with water after use to remove residues.

Likewise, do not store any cleaning agents or chemicals under the products, for example in a vanity unit, as the vapours may damage the products.

The damage of already damaged surfaces will deteriorate under the effect of the cleansers.

**Components with damaged surfaces must be exchanged, otherwise there could be an injury danger.**

Damage caused by improper treatment will not be covered by our guarantee.

## Warranty

Hansgrohe guarantees to the consumer that this product is free of production faults. If nevertheless any defect is detected within 5 years from date of purchase, Hansgrohe will remedy this defect free of charge. You will find the conditions and details of this guarantee at www.hansgrohe.com/guarantee. Please contact your contracting party to claim your rights under this guarantee. This guarantee does not affect the customer's rights under the respective national legislation.

## QuickClean
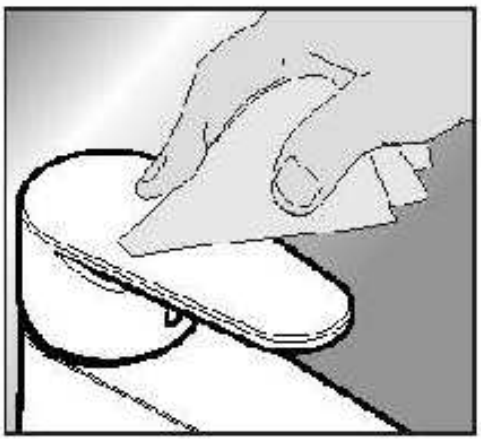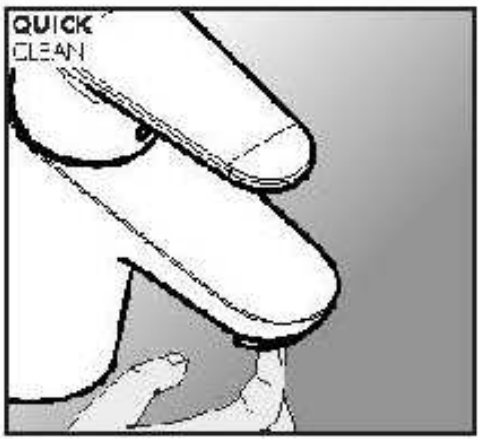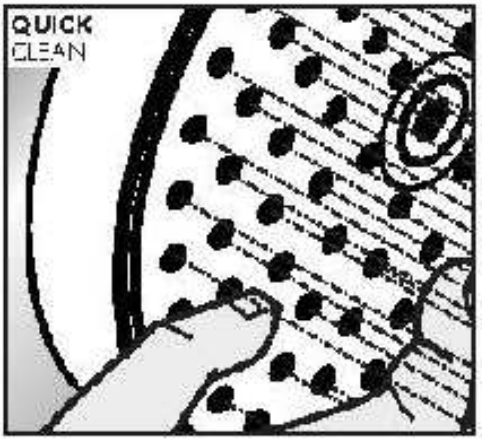
The QuickClean cleaning function only needs a small manual rub over to remove the lime scale from the spray channels.