hansgrohe

Hansgrohe · Auestraße 5 · 9 · D-77761 Schiltach · Telefon +49 (0) 78 36/51-1282 · Telefax +49 (0) 7836/511440 · E-Mail: info@hansgrohe.com · Internet: www.hansgrohe.com

DE Montageanleitung
FR Instructions de montage
EN Assembly instructions
IT Istruzioni per l'installazione
ES Instrucciones de montaje
NL Handleiding
DK Monteringsvejledning
PT Manual de instalación
PL Instrukcja montażu
CS Montážní návod
SK Montážny návod
ZH 组装说明
RU Инструкции по монтажу
FI Asennusohje
SV Monteringsanvisning
LT Montavimo instrukcijos
HR Uputstva za instalaciju
RO Instructiuni de montare
EL Οδηγία συναρμολόγησης
SL Navodila za montažo
ET Paigaldusjuhend
LV Montāžas instrukcija
SR Uputstva za montažu
NO Monteringsveiledning
BG Ръководство за монтаж
JP 施工説明書
UA Інструкції по збірці
AR تعليمات التجميع
TR Montaj kılavuzu
HU Szerelési útmutató
HE הוראות הרכבה

06/2016
96504604

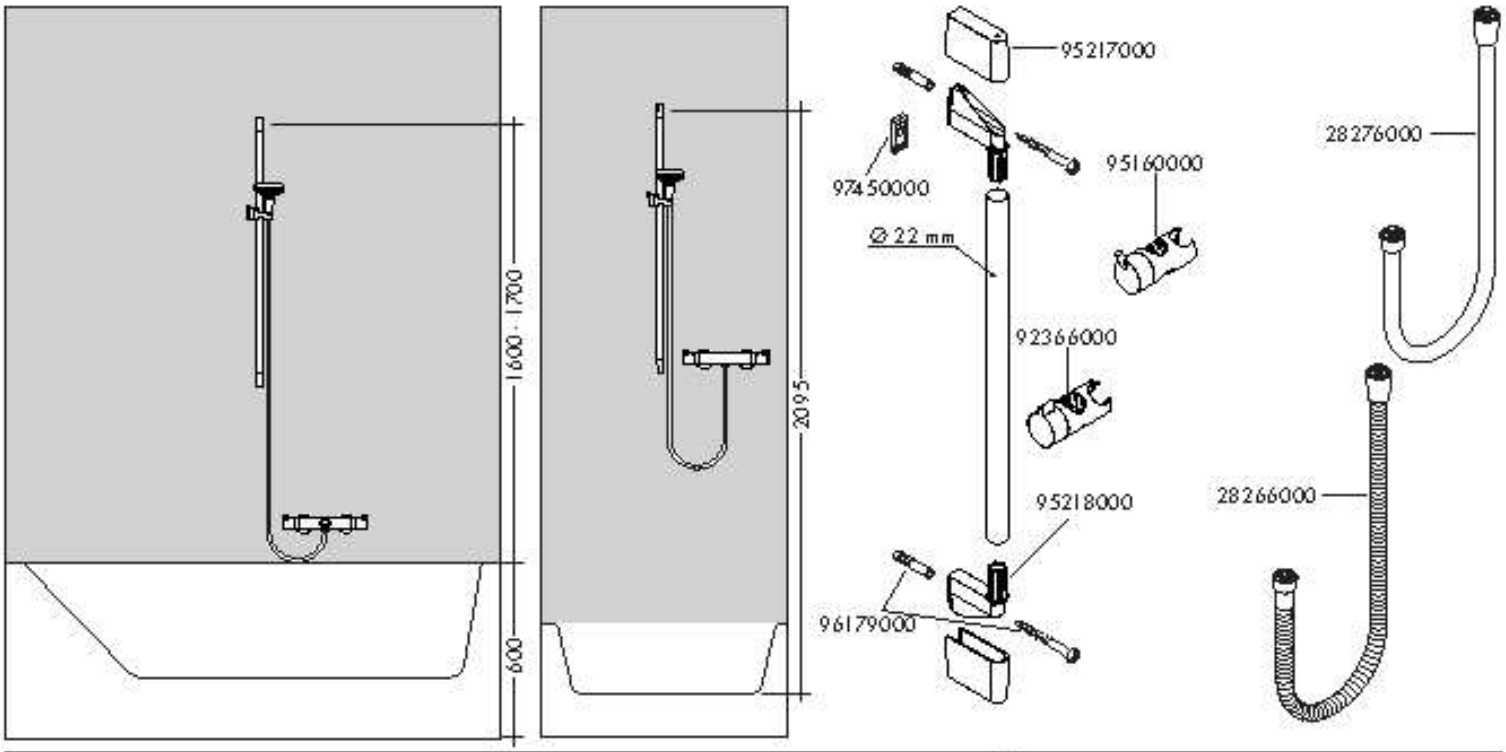

1a

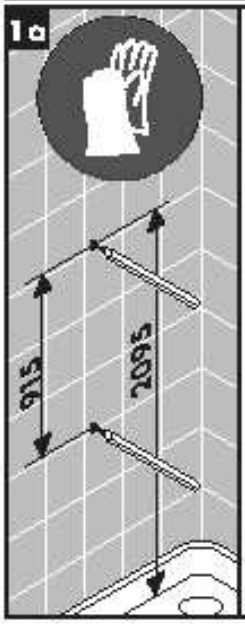

26504000 / 26506000 / 26536400 / 26537400 / 26538400 / 26539400 / 26570400 / 26571400 / 26572400 / 26573400 / 26574400 / 26575400 / 26590400 / 26591400 / 26592400 / 26593400 / 26594400 / 26595400 / 26656400 / 26657400 / 26658400 / 26659400 / 26662400 / 26663400 / 27014400 / 27031400 / 27080000 / 27082400 / 27609000 / 27614000 / 27651000 / 27729000 / 27762000 / 27766000 / 27813400

1b

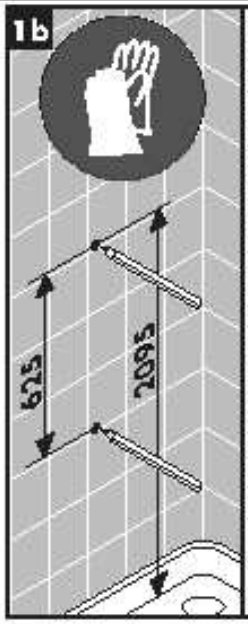

2627500X / 26279000 / 26503000 / 26505000 / 26525400 / 26526400 / 26527400 / 26532400 / 26533400 / 26534400 / 26535400 / 26553400 / 26554400 / 26555400 / 26560400 / 26561400 / 26562400 / 26563400 / 26564400 / 26565400 / 26566400 / 26580400 / 26581400 / 26582400 / 26583400 / 26584400 / 26585400 / 26586400 / 26650400 / 26651400 / 26652400 / 26653400 / 26654400 / 26655400 / 26660400 / 27013400 / 27030400 / 27058000 / 27081400 / 27615000 / 27652000 / 27728000 / 27763000 / 27764000 / 27767000 / 27812400 / 27817400 / 27827400

2

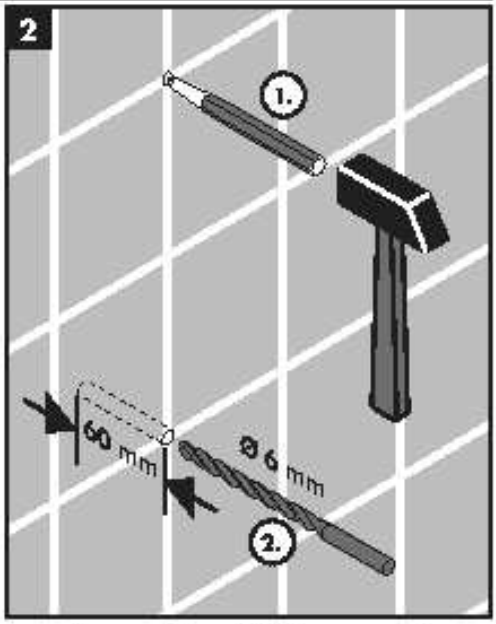

3

4

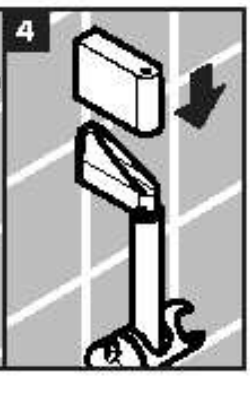

Silikon (essigsäurefrei)
Silicone (sans acide acétique)
Silicone (free from acetic acid)
Silicone (esente da acido acetico)
Silicona (libre de ácido acético)
Silicone (azijnzuurvrij)
Silikone (eddikesyrefri)
Silicone (sem ácido acético)
Silikon (neutralny)
Silikon (bez kyseliny octové)
Силикон (не содержит уксусной кислоты)
Silikon (bez kyseliny octovej)
硅胶 (不含醋酸)
Silikoni (etikkahappovapaa)
Silikon (fri från ättiksyra)
Silikonas (be acto rūgšties)
Silikon (ne sadrži kiseline)
Silicon (fără acid acetic)
Σιλικόνη (δίχως οξικό οξύ)
Silikon (brez ocetne kisline)
Silikoon (äädikhappeta)
Silikons (etiķskābi nesaturoši)
Silikon (ne sadrži sirćetnu kiselinu)
Silikon (uten eddiksyre)
Силикон (безоцетна киселина)
シリコン (非酢酸系)
Силикон (без оцтової кислоти)
إسيليكون (خالي من حمض الخليك)
Silikon (asetik asit içermeyen)
Szilikon (ecetsavmentes)
סיליקון (שאינו מכיל חומצה אצטית)

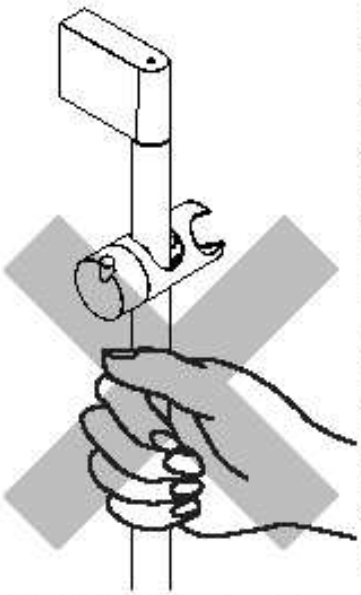

DE Das Produkt darf nicht als Haltegriff benutzt werden.

FR Le produit ne doit pas servir de poignée.

EN The product may not be used as a holding handle.

IT Il prodotto non deve essere utilizzato come maniglia.

ES El producto no debe ser utilizado como un elemento de sujeción.

NL Het product mag niet als handgreep worden gebruikt.

DK Produktet må ikke bruges som håndtag.

PT O produto não pode ser utilizado como pega de apoio.

PL Produktu nie wolno używać jako uchwytu do trzymania się.

FI Tuotetta ei saa käyttää kädensijana.

CS Produkt nesmí být používán jako madla.

SK Výrobok sa nesmie používať ako držadlo.

ZH 该产品不得作扶柄使用.

RU Изделие запрещается использовать в качестве рукоятки.

SV Produkten får inte användas som handtag.

LT Gaminys negali būti naudojamas kaip rankena. Rankena montuojama atskirai.

HR Proizvod ne smije služiti za pridržavanje.

RO Nu este permisă utilizarea produsului pe post de mâner.

EL Το προϊόν δεν επιτρέπεται να χρησιμοποιείται σαν λαβή στήριξης.

SL Proizvoda ne smete uporabljati kot držalnega ročaja.

ET Toodet ei tohi kasutada käepidemena.

LV Šo produktu nedrīkst izmantot kā rokturi balstīšanai.

SR Proizvod se ne sme koristiti za kao ručka za pridržavanje.

NO Produktet skal ikke brukes som holdegrep.

BG Продуктът не бива да се използва като дръжка.

JP 製品は取っ手として使用できません.

UA Виріб не можна використовувати як рукоятку.

AR لا يجوز استخدام المنتج كمقبض.

TR Ürün tutma kolu olarak kullanılmamalıdır.

HU A terméket nem szabad kapaszkodónak használni.

HE אסור להשתמש במוצר כידית תלויה.

www.hansgrohe.com/cleaning-recommendation

*www.hansgrohe.com/warranty

DE Reinigungsempfehlung / Garantie / Kontakt

FR Recommandation pour le nettoyage / Garanties / Contact

EN Cleaning recommendation / Warranty / Contact

IT Raccomandazione di pulizia / Garanzia / Contatto

ES Recomendaciones para la limpieza / Garantía / Contacto

NL Aanbevelingen inzake reiniging / Garantie / Contact

DK Rengøringsvejledning / Garanti / Kontakt

PT Recomendações de limpeza / Garantia / Contacto

PL Zalecenia dotyczące pielęgnacji / Gwarancja / Kontakt

CS Doporučení k čištění / Záruka / Kontakt

SK Odporúčania pre čistenie / Záruka / Kontakt

ZH 清洁指南 / 担保 / 接触

RU Рекомендации по очистке / Гарантия / Контакты

FI Puhdistussuositus / Takuu / Kosketus

SV Rengöringsrekommendationer / Garanti / Contacto

LT Valymo rekomendacijos / Garantija / Kontaktai

HR Preporuke za čišćenje / Garancija / Kontakt

RO Recomandări pentru curățare / Garanție / Contact

EL Σύσταση καθαρισμού / Εγγύηση / επαφή

SL Priporočila za čiščenje / Garancija / Kontakt

ET Puhastussoovitused / Garantii / Kontakt

LV Tīrīšanas ieteikumi / Garantija / Kontakti

SR Preporuke za čišćenje / Garancija / Kontakt

NO Anbefaling for rengjøring / Garanti / Kontakt

BG Препоръка за почистване / Гаранция / Контакт

JP お手入れの方法 / 保証について / ご連絡先

UA Рекомендації з чищення / Гарантія / контакт

AR توصيات التنظيف / الضمان / اتصال

TR Temizleme önerisi / Garanti / Temas Garanti belgesi ve başvuru için www.hansgrohe.com/tr web sitesini ziyaret ederek; dijital garanti belgenize ulaşabilirsiniz.

HU Tisztítási tanácsok / Garancia / érintkezés

HE המלצות לניקוי / אחריות / איש קשר

Special information for USA:

This unit does not include a wall supply. It must be used with Hansgrohe model 27458xx3 or another approved supply that complies with ASME A112.18.1 / CSA B125.1 including ASME A112.18.3.

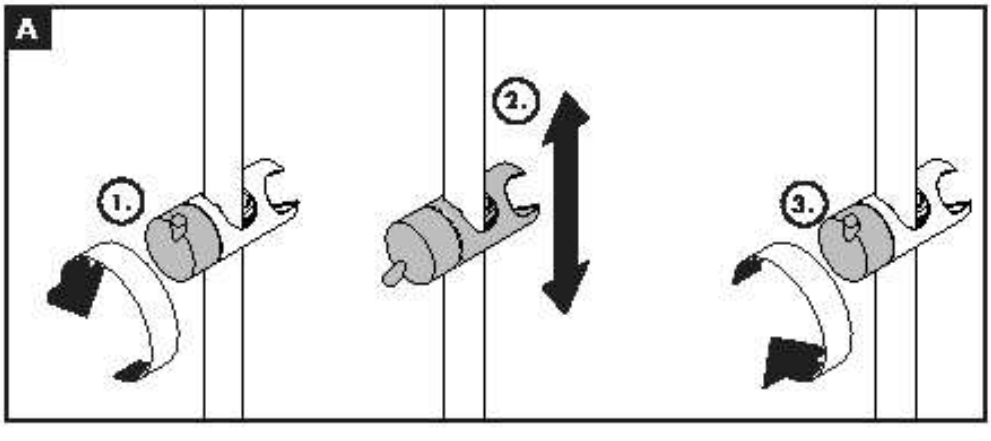

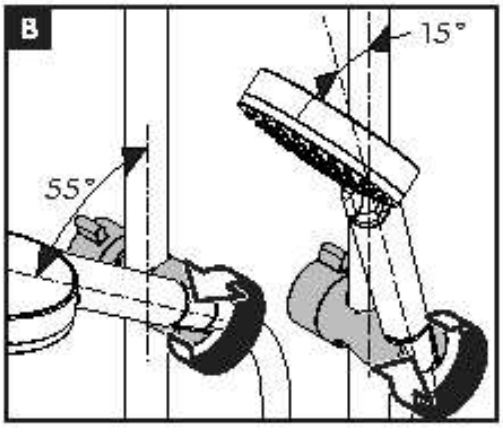

hansgrohe

ZH 用户手册 / 组装说明
EN Instructions for use / Assembly instructions

2
3

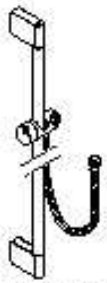

Unica'Crometta
27615007

Croma 100 Vario / Porter S Set 1250 EcoSmart
27592007

Croma 100 Vario / Porter S Set 1600 EcoSmart
27594007

Croma 100 Multi / Porter S Set 1600 EcoSmart
27595007

Croma 100 Vario / U' C 650 EcoSmart
27776007

Unica'Croma
26505007
26506007

Unica'C
27610007
27611007

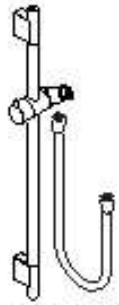

Unica'S Puro
28631XX7
28632XX7

安全技巧

⚠ 装配时为避免挤压和切割受伤，必须戴上手套。
⚠ 本产品只允许作为洗浴、卫生和淋身之用。
⚠ 不得让儿童和监护，精神和/或意识有障碍的成人在不受监管的情况下使用淋浴系统。受酒精或毒品影响的人员不得使用淋浴系统。
⚠ 必须避免让身体敏感部位（如眼睛）接触到莲蓬头喷水。必须保持莲蓬头与人头之间有足够的距离。
⚠ 该产品不得作扶柄使用。必须安装单独的扶柄。
⚠ 淋浴软管只适合从淋浴器连接到管接头。切勿在管接头和软管之间安装截止装置。

安装提示

- 安装前必须检查产品是否受到运输损害。安装后将不认可运输损害或表面损伤。
- 管道和阀门必须根据通用标准进行安装、冲洗和检查。
- 请遵守当地国家现行的安装规定。
- 请搭配使用汉斯格雅的手持花洒以及花洒软管以确保最佳的使用效果。
- 由有资格的专业人员进行产品安装时请注意：在所有加固区域中，加固表面是否平整（无突出的接缝或瓷砖），墙体结构是否适合产品安装且未显露出任何缺点。
- 必须将上花洒所附带的锥网密封垫，以过滤管道里的杂质污物。杂质污物会影响花洒的功能和/或损坏花洒的功能部件，由此而产生的产品损坏不属于汉斯格雅的保修范围。

技术参数

工作压强：	最大 0,6 MPa
推荐工作压强：	0,1 - 0,4 MPa (1 MPa = 10 bar = 147 PSI)
热水温度：	最大 60 °C
热力消毒：	70 °C / 4 分钟

（该产品专为饮用水设计）

符号说明

请勿使用含有乙酸的硅胶！

大小（参见第页 10）

流量示意图（参见第页 12）

备用零件（参见第页 13）
XX - 颜色代码
00 - 镀铬
14 - Brushed Bronze
34 - Brushed Black Chrome
67 - Matt Black
70 - Matt White
99 - Polished Gold-Optic

选装附件（不在供货范围内）

匹配瓷砖的圆盘 #97450X00（参见第页 3）

清洗（参见第页 7）

操作（参见第页 12）

安装（参见第页 4）

Safety Notes

⚠ Gloves should be worn during installation to prevent crushing and cutting injuries.

⚠ The product may only be used for bathing, hygienic and body cleaning purposes.

⚠ Children as well as adults with physical, mental and/or sensoric impairments must not use this product without proper supervision. Persons under the influence of alcohol or drugs are prohibited from using this product.

⚠ Do not allow the streams of the shower touch sensitive body parts (such as your eyes). An adequate distance must be kept between the shower and you.

⚠ The product may not be used as a holding handle. A separate handle must be installed.

⚠ Shower hoses are only suitable for a connection from the shower to the fitting. Never fit a shut-off device between the fitting and the hose.

Installation Instructions

- Prior to installation, inspect the product for transport damages. After it has been installed, no transport or surface damage will be honoured.
- The pipes and the fixture must be installed, flushed and tested as per the applicable standards.
- The plumbing codes applicable in the respective countries must be observed.
- Optimal functioning is only guaranteed with the combination of Hansgrohe hand showers and Hansgrohe shower hoses.
- During installation of the product by qualified trained personnel, make sure that the entire fastening surface is even and smooth (no protruding seams or tile offset), that the finish of the wall is suitable to apply the product and has no weak points.
- The mesh washer must be insert to protect the shower against incoming dirt by pipework. Incoming dirt leads to defects on/and can damage parts of the shower; such caused faults voids all liability and guarantee claims.

Technical Data

Operating pressure:	max. 0,6 MPa
Recommended operating pressure:	0,1 - 0,4 MPa (1 MPa = 10 bar = 147 PSI)
Hot water temperature:	max. 60 °C
Thermal disinfection:	70 °C / 4 min

The product is exclusively designed for drinking water!

Symbol description

Do not use silicone containing acetic acid!

Dimensions (see page 10)

Flow diagram (see page 12)

Spare parts (see page 13)

XX - Colors
00 - Chrome Plated
14 - Brushed Bronze
34 - Brushed Black Chrome
67 - Matt Black
70 - Matt White
99 - Polished Gold-Optic

Special accessories (order as an extra)

tile-matching disk #97450XX0 (see page 13)

Cleaning (see page 7)

Operation (see page 12)

Assembly (see page 4)

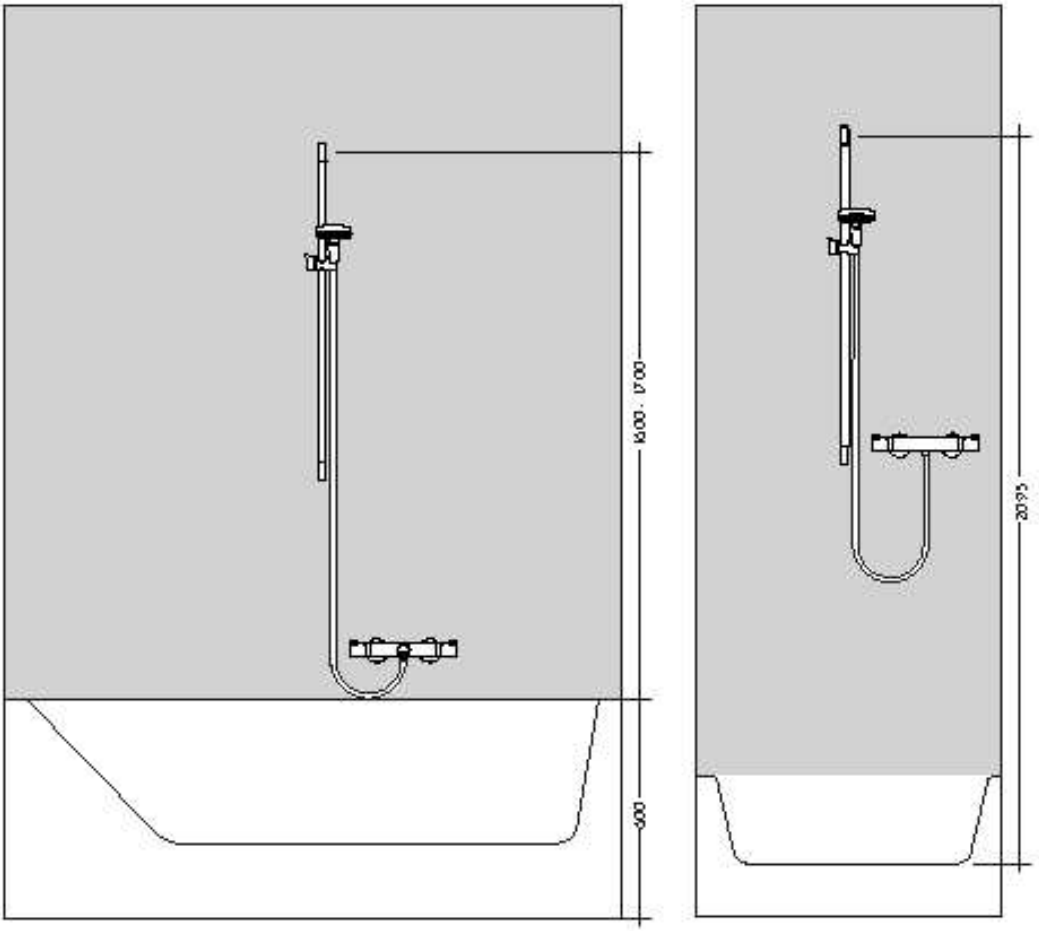
1500 - 1700
300
2000

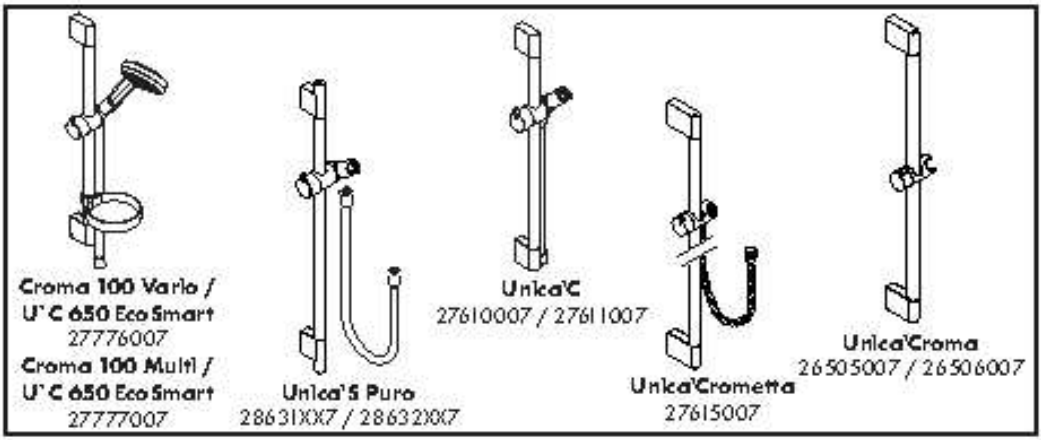
Croma 100 Vario /
U`C 650 EcoSmart
27776007
Croma 100 Multi /
U`C 650 EcoSmart
27777007
Unica'S Puro
28631XX7 / 28632XX7
Unica'C
27610007 / 27611007
Unica'Crometta
27615007
Unica'Croma
26505007 / 26506007

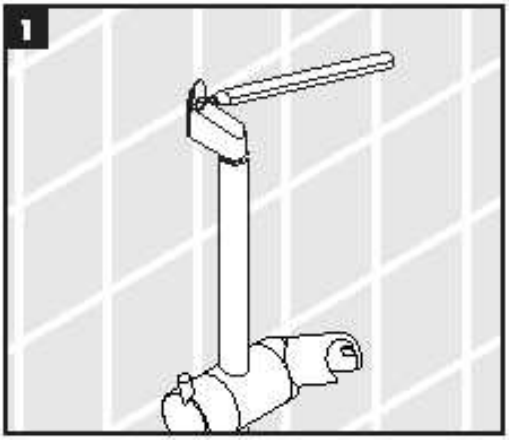
1

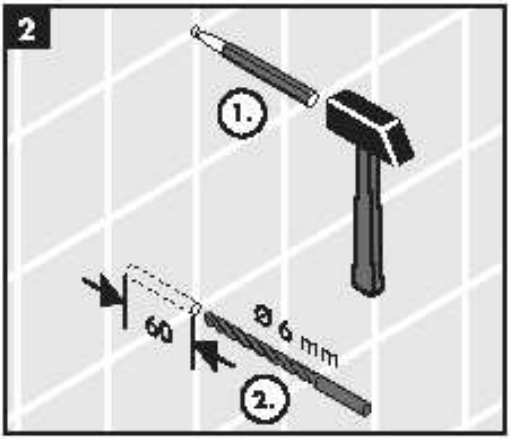
2
1.
8
Ø 6 mm
2.

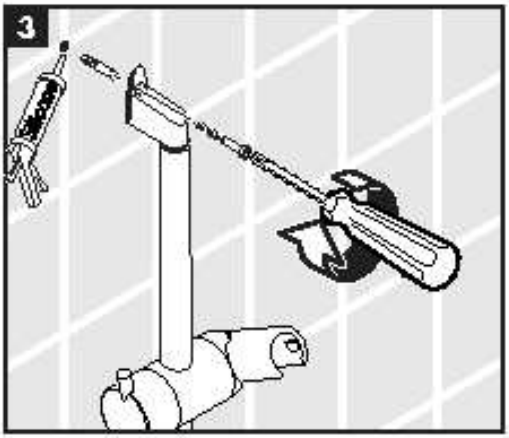
3

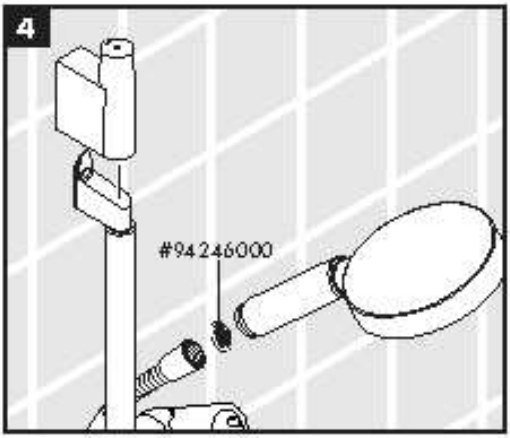
4
#94246000

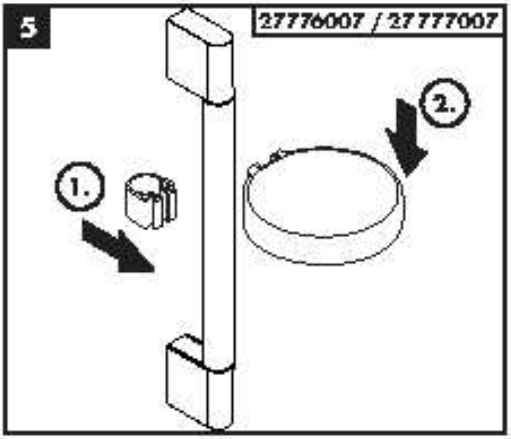
5
27776007 / 27777007
1.
2.

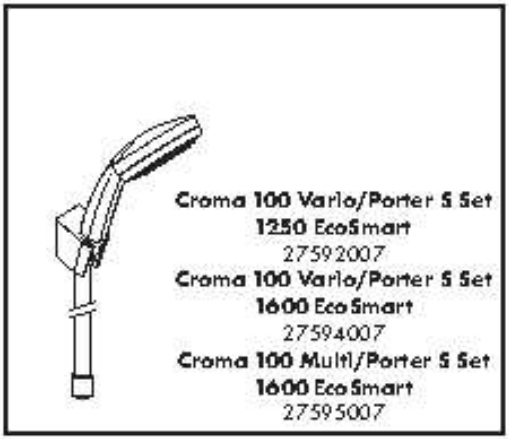
Croma 100 Vario/Porter S Set
1250 EcoSmart
27592007
Croma 100 Vario/Porter S Set
1600 EcoSmart
27594007
Croma 100 Multi/Porter S Set
1600 EcoSmart
27595007

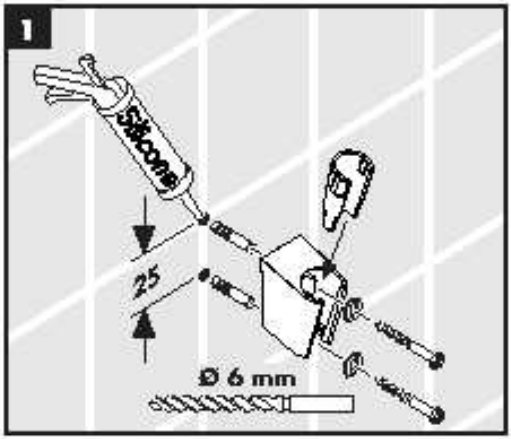
1
Silicone
25
Ø 6 mm

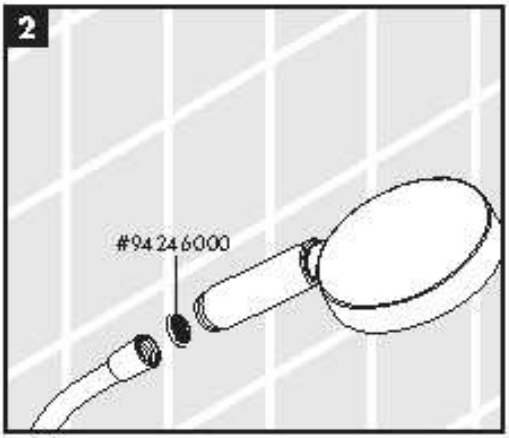
2
#94246000

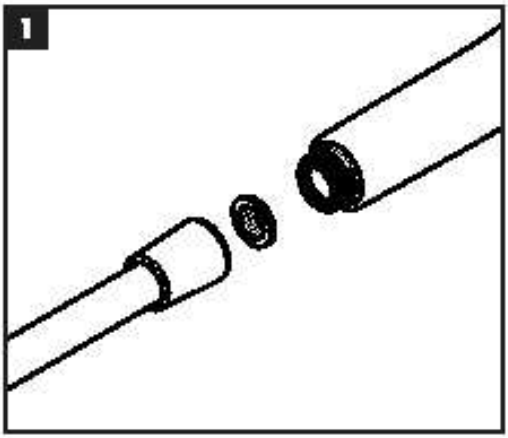
1

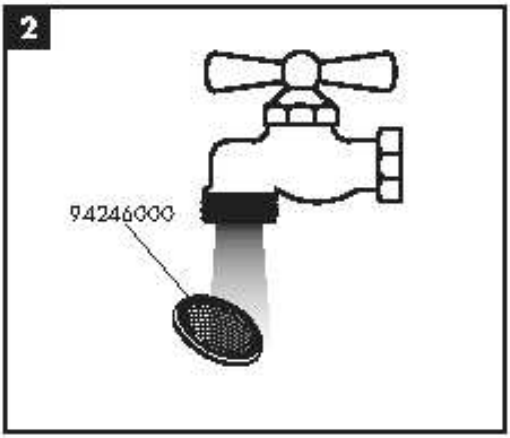
2
94246000

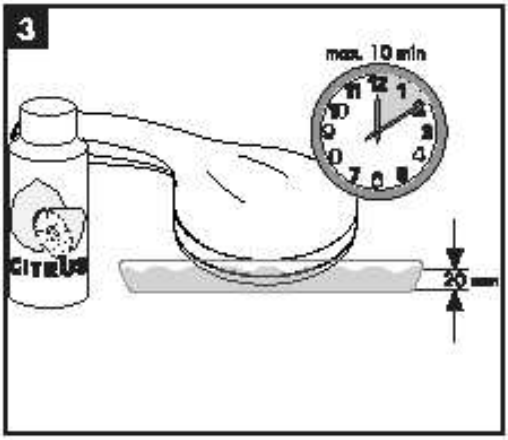
3
max. 10 min
CITRUS
20 mm

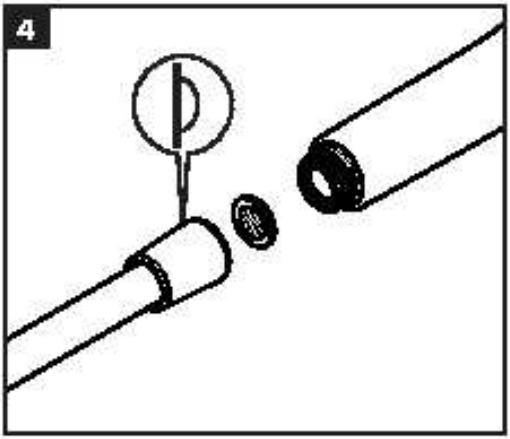
4

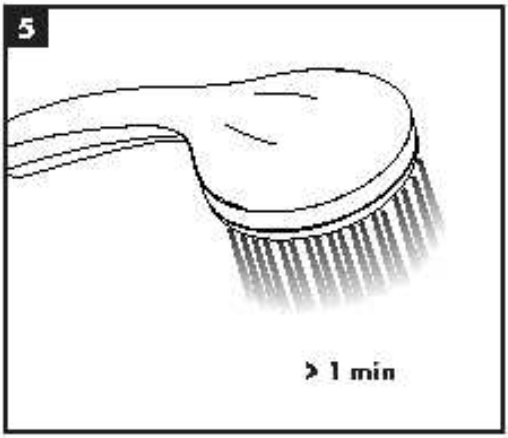
5
> 1 min

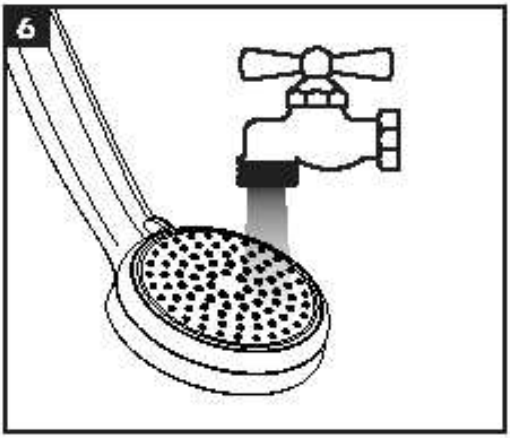
6

汉斯格雅产品的清洁建议

现代的卫浴龙头、厨房龙头、花洒、配件、置洗台、浴盆和加热器采用的制造材料非常迥异，以适应产品外形设计和使用功能的市场需求。

为了避免产品损坏和由此引发的投诉及争议，必须在使用和清洁产品时遵循有关规程。

在保养汉斯格雅产品时，原则上必须注意：

- 只能使用那些有明确注明是适用于本产品的清洁剂。
- 不允许使用含有盐酸、软酸、氯源或醋酸的清洁剂，因为这些清洁剂会给产品表面造成严重的损伤。
- 含磷酸的清洁剂必须在特定条件下使用。
- 不允许将两种以上清洁剂混合使用。
- 不允许使用具有研磨作用的清洁工具和设备，如不适合的清洁粉末、海绵垫或超细麦克布。
- 必须严格遵守清洁剂生产厂商的使用说明。
- 严格遵守清洁剂的用量和作用时间，决不允许清洁剂的作用时间长于规定值。
- 定期的清洁以预防水垢。
- 不允许将清洁剂直接喷射到汉斯格雅产品上，因为喷雾会进入汉斯格雅产品的开口部分和缝隙中而造成损害。首先将清洁剂喷在软布上，再用软布进行清洁。
- 清洁之后必须用足够的清水冲洗，以彻底去除残留的吸附物(清洁剂)。
- 不允许使用蒸汽清洗机，高温会损害产品。

重要说明

肥皂、洗发水、沐浴液、染发剂、香水、剂胡水、指甲油的残留也会对产品造成损伤。

此处：使用后要小心地用清水将剩余物冲洗干净。

同样在产品下方不得存放洗涤剂和化学药品，例如不可放在用于洗脸盆的抹洗柜中否则挥发气体将损坏产品。

在已经损伤的表面继续使用清洁剂会给表面造成更大的损伤。

表面损坏的部件必须更换，否则会有受伤的危险。

不按规定进行清洁而造成的任何损坏不在本公司产品保修范围之内。

担保

Hansgrohe 向用户保证，该产品无制造 缺陷。如果自购买之日起五年内出现缺 陷，Hansgrohe 将免费排除。保证条件和详 情见 www.hansgrohe-int.com/guarantee。在提 出保修的权利时请联系您的合同方。本保证 不涉及有关国家法律规定的消费权。

QuickClean

有了QuickClean，手工清洁功能，要去掉喷头上的水垢，只需简单地摇除即可。

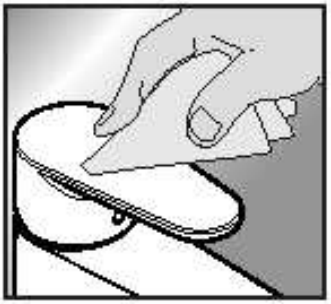

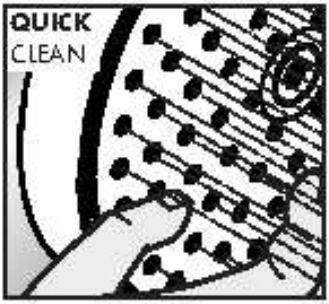

Cleaning Recommendation for Hansgrohe Products

Today, modern sanitary and kitchen tapware, showers, accessories, washstands, tubs and radiators consist of very different materials to comply with the needs of the market with regard to design and functionality.

To avoid damage and reclamations, it is necessary to consider certain criteria when cleaning.

With regard to caring for the Hansgrohe products, the following must in principle be heeded:

- Only use cleaning material which is explicitly provided for this type of application.
- Never use cleaning materials, which contain hydrochloric acid, formic acid, chlorine pale lye or acetic acid, as they cause considerable damage.
- Phosphorus acidic cleaners are only conditionally applicable.
- Mixing cleaning agents is not permitted, generally.
- Never use cleaning materials or appliances with an abrasive effect, such as unsuitable cleaning powders, sponge pads or micro fibre cloths.
- The instructions of the cleaning agent manufacturers have to be followed absolutely.
- Cleaning has to be carried out with a specified cleaner dosage, contact time, object related and adapted to the needs.
- The building up of calcifications has to be removed by cleaning regularly.
- When using spray cleaners, spray the cleaning solution onto a soft cloth or sponge, never directly onto the Hansgrohe products, as the atomised spray could enter openings and gaps in the Hansgrohe products and cause damage.
- After cleaning rinse thoroughly with clean water to remove any cleaner residue.
- The use of steam cleaners is not permitted. The high temperatures can damage the products.

Important

Residues of toiletries such as liquid soaps, shampoos and shower gels, hair dyes, perfumes, aftershave and nail varnish can also cause damage.

Here too: Carefully rinse with water after use to remove residues.

Likewise, do not store any cleaning agents or chemicals under the products, for example in a vanity unit, as the vapours may damage the products.

The damage of already damaged surfaces will deteriorate under the effect of the cleansers.

Components with damaged surfaces must be exchanged, otherwise there could be an injury danger.

Damage caused by improper treatment will not be covered by our guarantee.

Warranty

Hansgrohe guarantees to the consumer that this product is free of production faults. If nevertheless any defect is detected within 5 years from date of purchase, Hansgrohe will remedy this defect free of charge. You will find the conditions and details of this guarantee at www.hansgrohe-int.com/guarantee. Please contact your contracting party to claim your rights under this guarantee. This guarantee does not affect the customer's rights under the respective national legislation.

QuickClean

The QuickClean cleaning function only needs a small manual rub over to remove the lime scale from the spray channels.

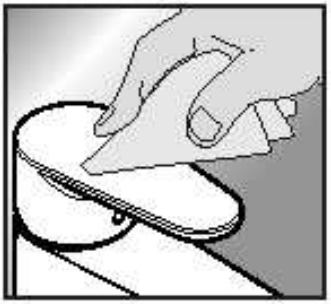

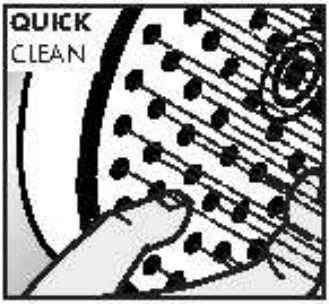

Croma 100 Vario /
Porter S Set EcoSmart
27592007 / 27594007

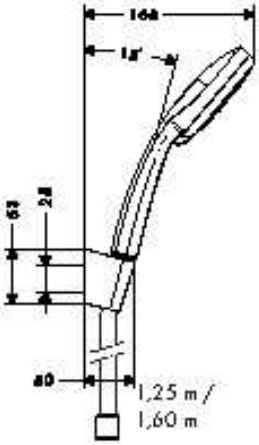

Croma 100 Multi /
Porter S Set 1600 EcoSmart
27595007

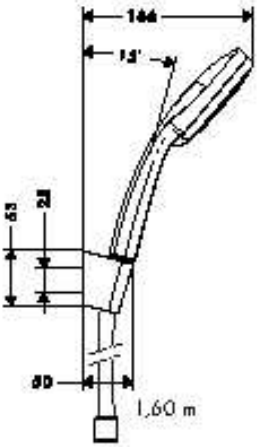

Croma 100 Vario /
U`C 650 EcoSmart
27776007
Croma 100 Multi /
U`C 650 EcoSmart
27777007

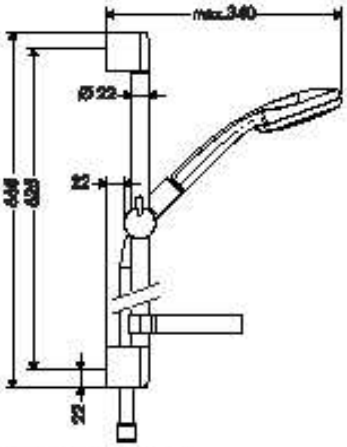

Croma 100 Vario
EcoSmart
28537007

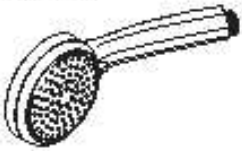

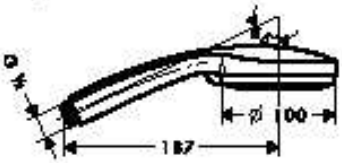

Croma 100 Multi
EcoSmart
28538007

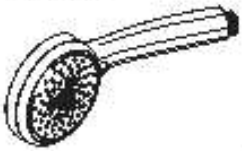

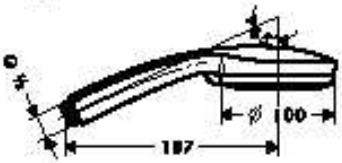

Croma 100 Vario
EcoSmart
28537007
Croma 100 Multi
EcoSmart
28538007

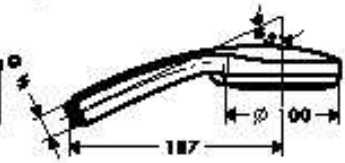

Unica'Croma
26505007

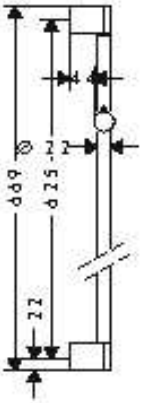

Unica'Croma
26506007

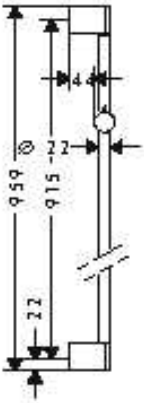

Unica'Crometta
27615007

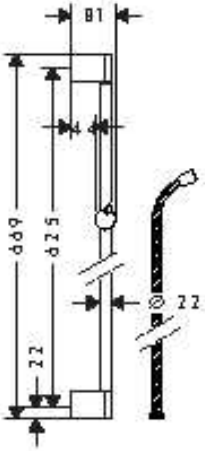

Unica'C
27610007

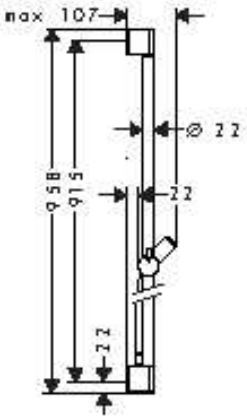

Unica'C
27611007

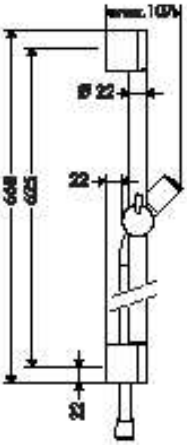

Unica'S Puro
28632XX7

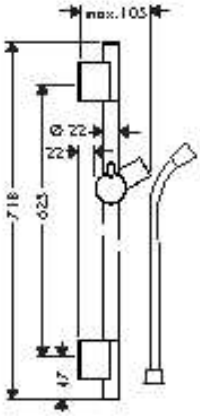

Unica'S Puro
28631XX7

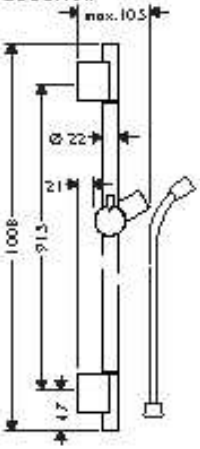

Croma 100 Vario EcoSmart 28537007

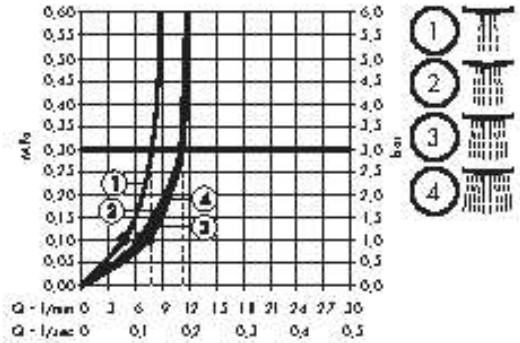

Croma 100 Multi EcoSmart 28538007

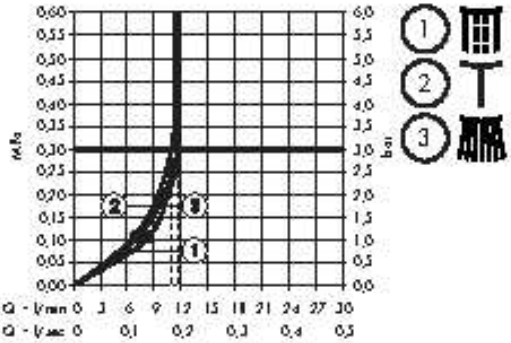

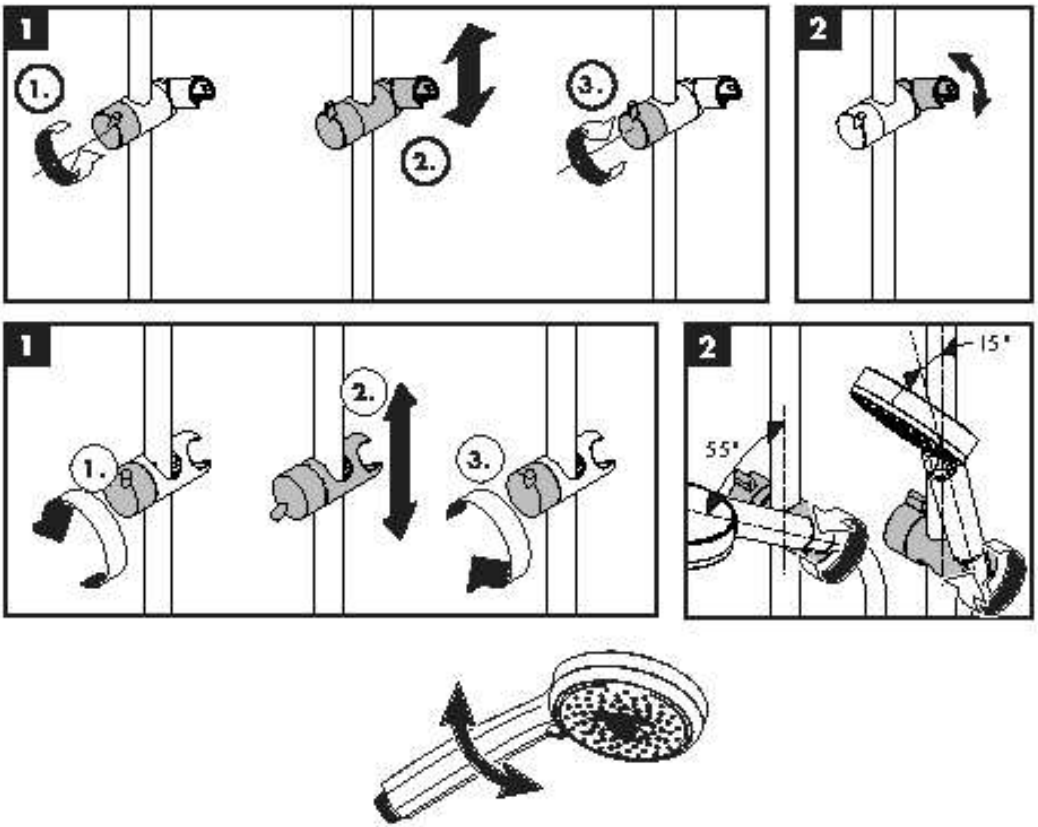

Croma 100 Vario /
Porter S Set EcoSmart
27592007 / 27594007
Croma 100 Multi /
Porter S Set 1600 EcoSmart
27595007

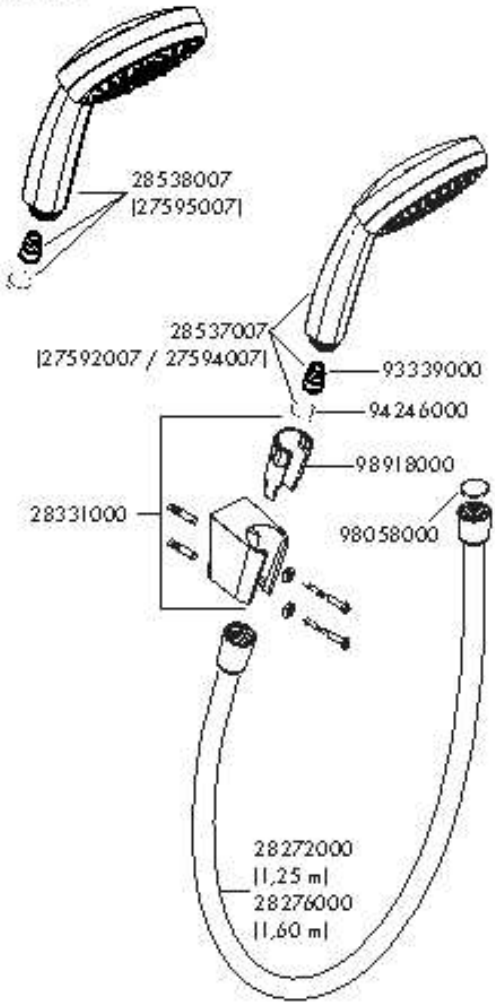

Unica'Croma
26505007 / 26506007
Unica'Crometta
27615007

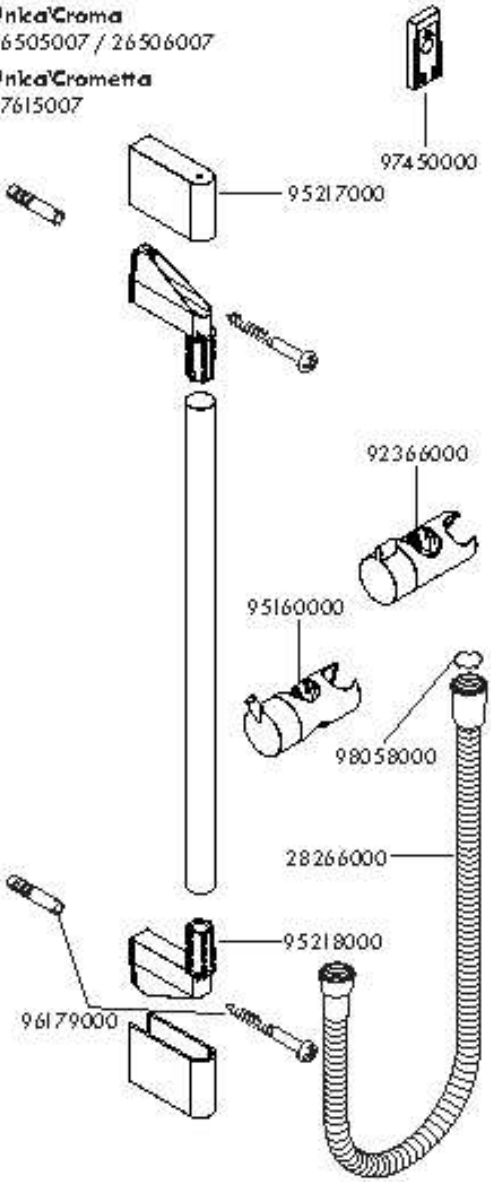

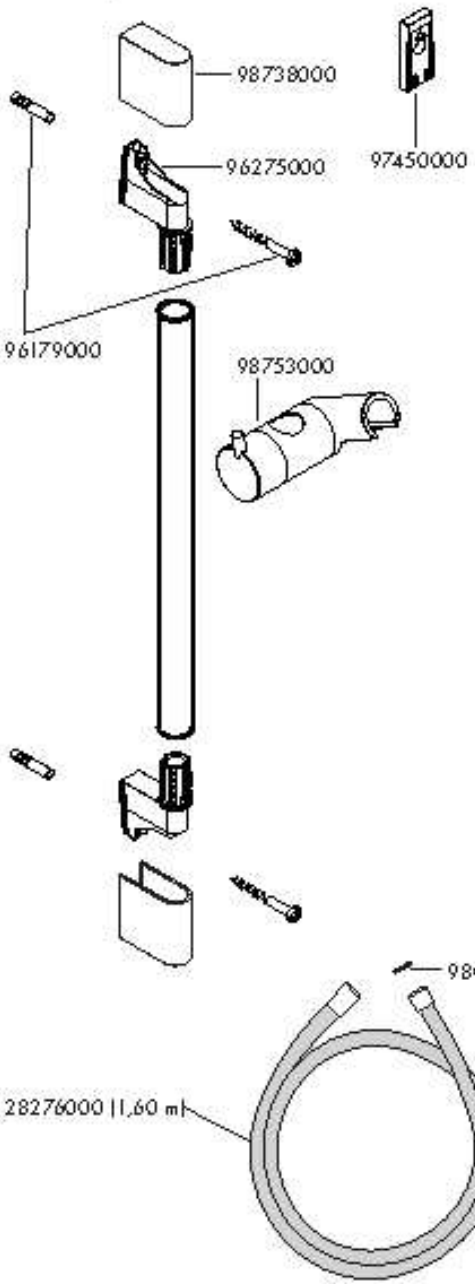

Unica'S Puro
28631007

Unica'S Puro
28632007

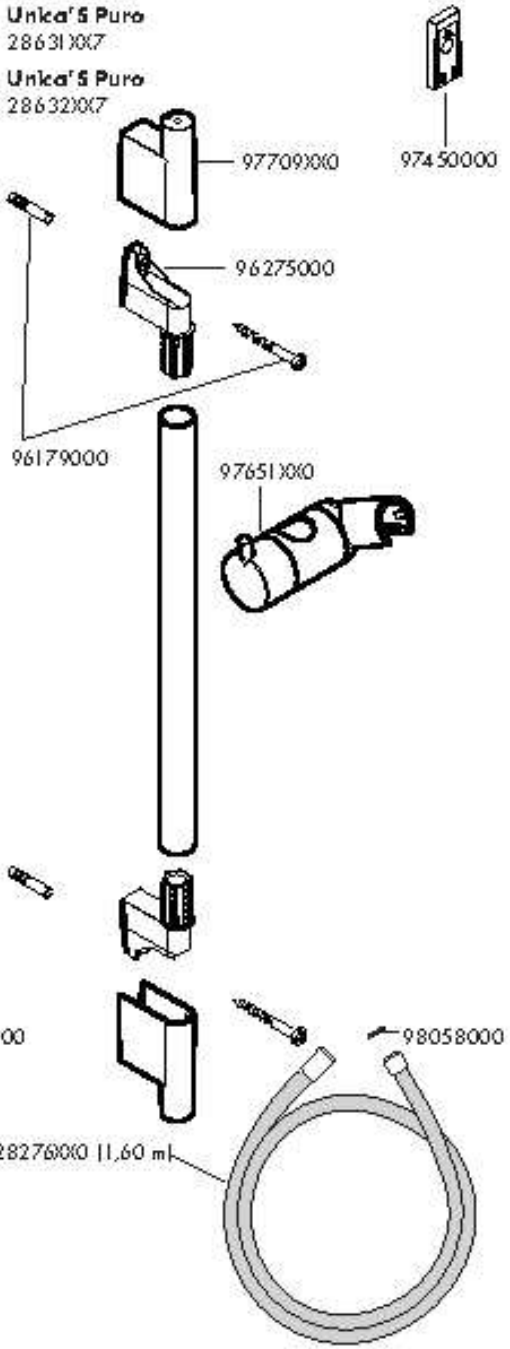

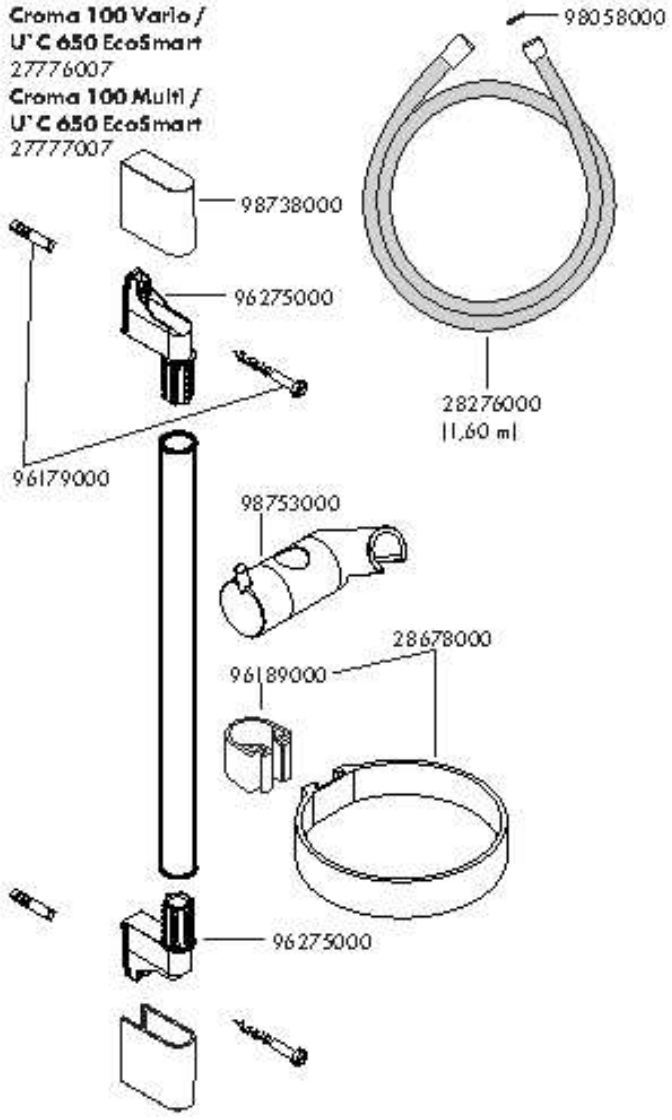

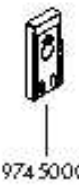

Croma 100 Vario EcoSmart
28537007

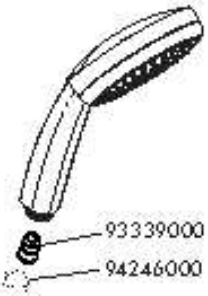

Croma 100 Multi EcoSmart
28538007

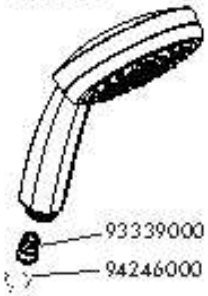

hansgrohe

Hansgrohe · Auestraße 5 - 9 · D-77761 Schiltach · Telefon +49 (0) 7836/51-1212 · Telefax +49 (0) 7836/511440
E-Mail: info@hansgrohe.com · Internet: www.hansgrohe.com

03/2004
9 09 607 06 001

hansgrohe

DE Montageanleitung
FR Instructions de montage
EN Assembly instructions
IT Istruzioni per l'installazione
ES Instrucciones de montaje
NL Handleiding
DK Monteringsvejledning
PT Manual de instalación
PL Instrukcja montażu
CS Montážní návod
SK Montážny návod
ZH 组装说明
RU Инструкция по монтажу
HU Szerelési útmutató
FI Asennusohje
SV Monteringsanvisning
LT Montavimo instrukcijos
HR Uputstva za instalaciju
TR Montaj kılavuzu
RO Instrucţiuni de montare
EL Οδηγία συναρμολόγησης
SL Navodila za montažo
ET Paigaldusjuhend
LV Montāžas instrukcija
SR Uputstvo za montažu
NO Monteringsveiledning
BG Инструкция за употреба
UA Інструкція по збірці
AR تعليمات التجميع
JP 施工説明書
HE הוראות הרכבה

Crometta 85 1jet
28585000

Crometta 85 Vario
28562000 / 27559005

Crometta 85 Multi
28563000

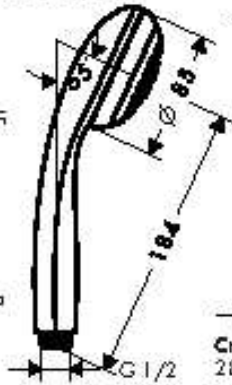

Crometta 85 1jet
28585000

Crometta 85 Vario
28562000 / 27559005

Crometta 85 Multi
28563000

www.hansgrohe.com/cleaningrecommendation

DE Reinigungsempfehlung / Garantie / Kontakt

FR Recommandation pour le nettoyage / Garanties / Contact

EN Cleaning recommendation / Warranty / Contact

IT Raccomandazione di pulizia / Garanzia / Contatto

ES Recomendaciones para la limpieza / Garantía / Contacto

NL Aanbevelingen inzake reiniging / Garantie / Contact

DK Rengøringsvejledning / Garanti / Kontakt

PT Recomendações de limpeza / Garantia / Contacto

PL Zalecenie dotyczące pielęgnacji / Gwarancja / Kontakt

CS Doporučení k čištění / Záruka / Kontakt

SK Odporúčania pre čistenie / Záruka / Kontakt

ZH 清洁指南 / 担保 / 接触

RU Рекомендации по очистке / Гарантия / Контакты

FI Puhdistussuositus / Takuu / Kosketus

SV Rengöringsrekommendationer / Garanti / Contacta

LT Valymo rekomendacijas / Garantija / Kontaktai

HR Preporuke za čišćenje / Garancija / Kontakt

RO Recomandări pentru curățare / Garanție / Contact

EL Σύσταση καθαρισμού / Εγγύηση / επαφή

SL Priporočila za čiščenje / Garancija / Kontakt

ET Puhastussoovitused / Garantii / Kontakt

LV Tīrīšanas ieteikumi / Garantija / Kontakti

SR Preporuke za čišćenje / Garancija / Kontakt

NO Anbefaling for rengjøring / Garanti / Kontakt

BG Препоръка за почистване / Гаранция / Контакт

JP お手入れの方法 / 保証について / ご連絡先

UA Рекомендації з чищення / Гарантія / контакт

AR توصيات التنظيف / الضمان / اتصال

TR Temizleme önerisi / Garanti / Temas Garanti belgesi ve başvuru için www.hansgrohe.com/web sitesini ziyaret ederek; dijital garanti belgenize ulaşabilirsiniz.

HU Tisztítási tanácsok / Garancia / érintkezés

HE המלצות לניקוי / אחריות / איש קשר

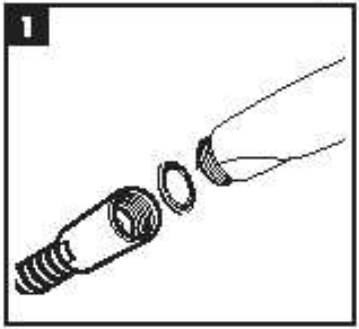
1

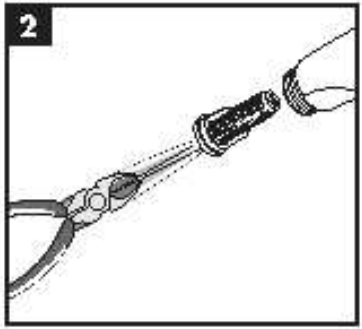
2

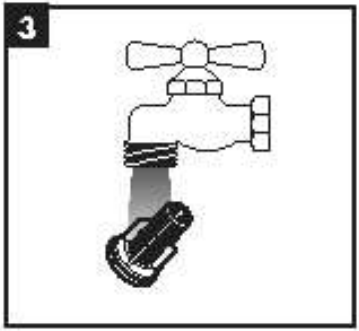
3

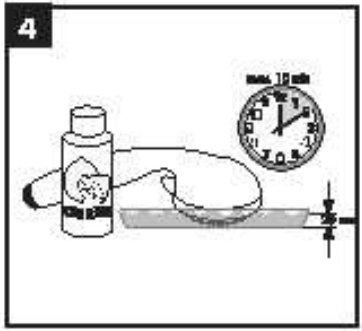
4

5

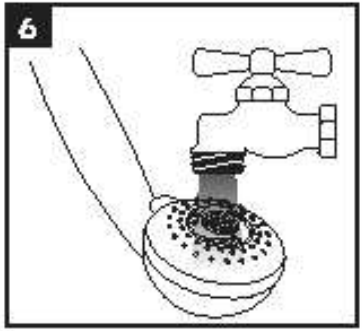
6

DE Einfach sauber: Kalkflüsse schwanden Nappen ganz leicht abrubbeln.

FR La propreté en toute simplicité: les dépôts formés sur les buses éléphoques en silicone s'éliminent par un simple passage de la main.

EN Just clean: simply rub over the spray nozzles to remove lime scale.

IT Facile da pulire: Il calcare viene eliminato semplicemente dagli ugelli elastici in silicone.

ES Fácil aseo: la cal se puede retirar sencillamente frotando con las dedos de las toberas elásticas de silicona.

NL Eenvoudig schoon: Kalk kan eenvoudig van de nappen worden gewreven.

DK Enkel rengøring: Det er let at fjerne kalkaflejringer fra silikonedyserne.

PT Simplesmente limpa: a calcária pode ser simplesmente retirada dos salientes através de fricção.

PL Po prostu czysta: Kamień można całkiem łatwo uczyścić z komina.

CS Jednoduše čistá: Vápenné usazeniny můžete z napařů snadno odstranit otřením.

SK Jednoducho čistý: Vodný kameň sa dá za štetinkou ľahko odstrániť.

ZH 很洁: 只需要轻轻地将表面的出水孔即可去除水垢.

RU Простая чистота: известь очень легко стирается с углублений.

FI Yksinkertaisesti puhdas: kalkin voi helposti hieroa irti nypystä.

SV Enkelt att göra rent: det är lätt att ta bort kalk från napparna.

LT Paprasta švara: kalkės lengvai nugrandamas nuo kilpas.

HR Jednostavno čista: Kamenac se sasvim lako otklanja s izbočina.

RO Pur şi simplu curat: Calcarul se îndepărtează uşor de pe noduri prin frecare.

EL Απλά τέλεια καθαριότητα: Τα άλατα μπορούν να αφαιρεθούν με μεγάλη ευκολία από τα ακροφύσια.

SL Preprosta čista: apnenec se z lahkota podrgne z vzviškov.

ET Lihtsalt puhas: lupja saab nuppudelt lihtsalt mahahõõrutuda.

LV Vienkārša tīrīšana: kaļķis no izvirzījumiem ir viegli nerubināms.

SR Jednostavno čista: Kamenac se sasvim lako skida sa izbočina.

NO Simpel rengjøring: Vedå gnikke er det lett å fjerne kalk fra nuppene.

BG Простачиста: Варовикът може да се изтрие от удебеленията.

JP 簡単に清掃: カルキはノズル部をこすることで簡単に除去できます.

UA Просте очищення: накип легко видаляється з виступів.

AR يمكن بسهولة إزالة الكلس بسهولة بفرك الحلمات.

TR Sadece temiz: Kireç, düğümlerde kolayca ovalanabilir.

HU Egyszerűen tiszta: a vízkő egészen könnyen ledörzsölhető a csomókról.

HE צריך פשוט לנקות: שפשוף את פיות ההתזה כדי להרחיק את הפח

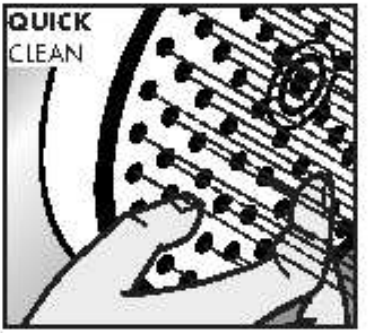

P	max. 0,6 MPa 6 bar	0,1 - 0,4 MPa 1 - 4 bar	
T	max. 60 °C	<50 °C	

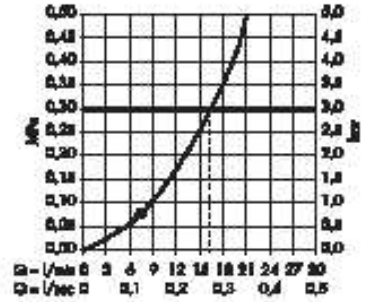

Crometta 85 1jet 28585000

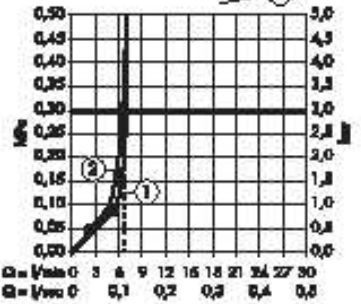

Crometta 85 Varlo 27559005

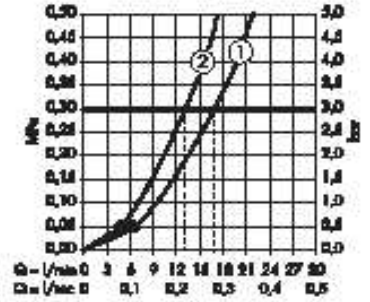

Crometta 85 Varlo 28562000

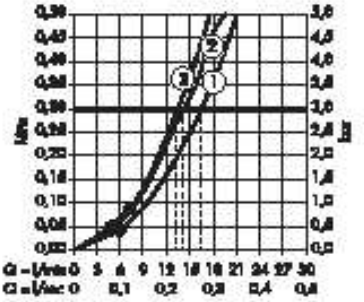

Crometta 85 Multi 28563000

	P-IX	DVGW	NF
28562000	P-IX 18738/IB	BT0633	X
28563000	P-IX 18739/IB	BT0633	
28585000	P-IX 19694/IB		X
27559005			

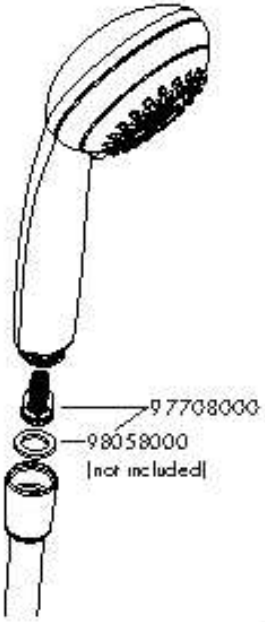

Crometta 85 Vario
28562000 / 27559005

Crometta 85 Multi
28563000

Hansgrohe · Auestraße 5 - 9 · D-77761 Schiltach
Telefon +49 (0) 78 36/51-1282 · Telefax +49 (0) 7836/511440
E-Mail: info@hansgrohe.com · Internet: www.hansgrohe.com

01/2004
96437507