D-Neo # DE 4254

Mounting instructions

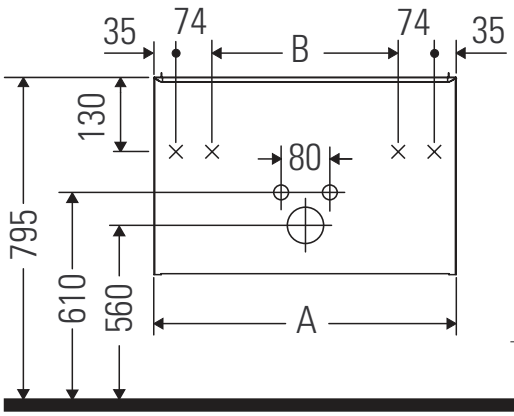

A mm	B mm	W mm	X mm
634	416	55	795

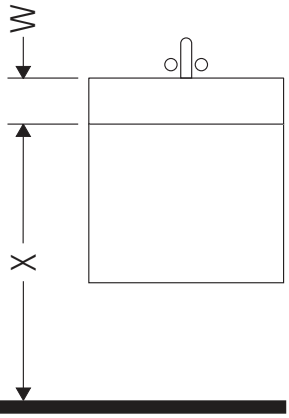

D-Neo # 236765

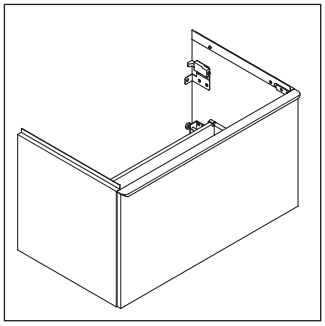

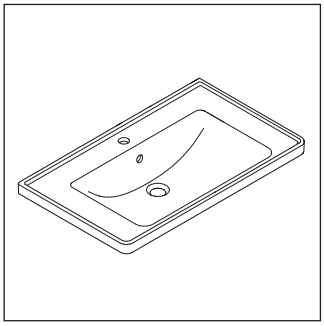

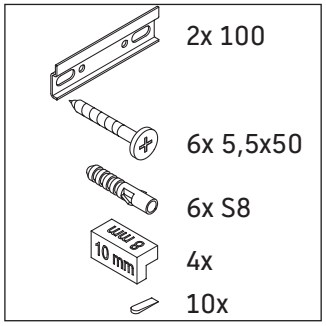

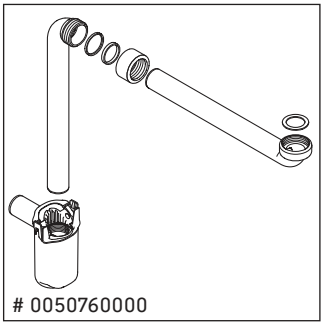

Instructions for use

The bathroom furniture range complies with the standards and guidelines applicable at the time of delivery and is designed for use in bathrooms. Direct contact with water should be avoided, for example, when showering.

We reserve the right to make technical improvements and design modifications to the products illustrated.

1

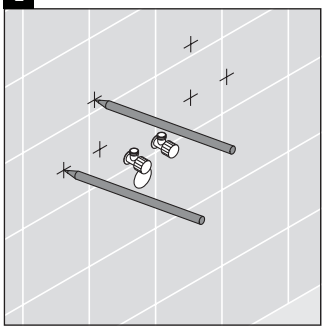

2

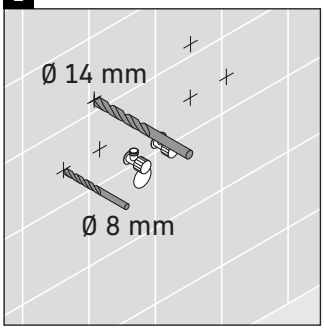

3

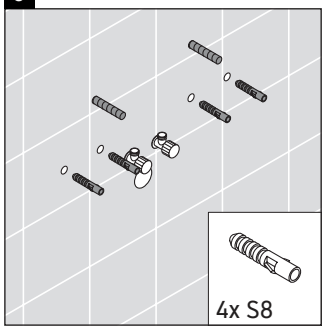

4

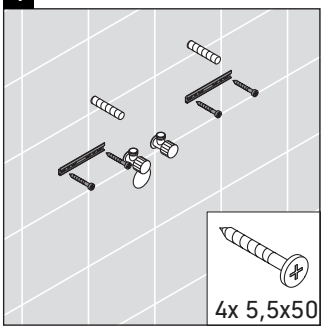

5

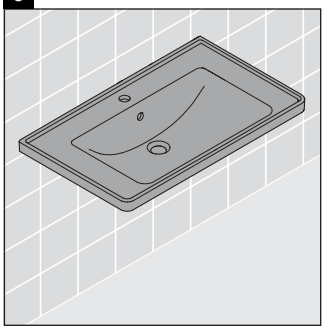

6

7

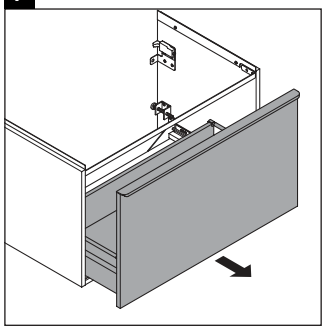

8

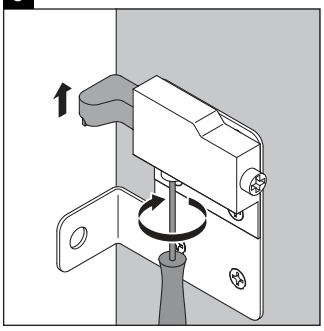

9

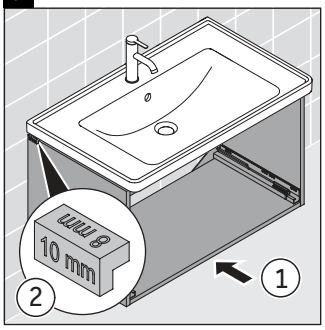

10

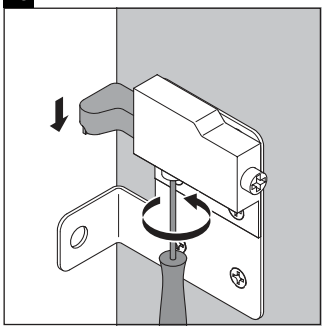

11

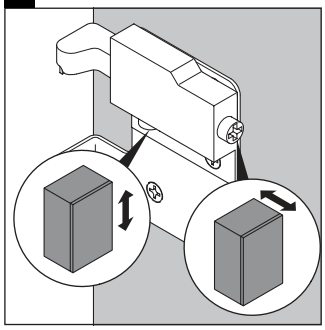

12

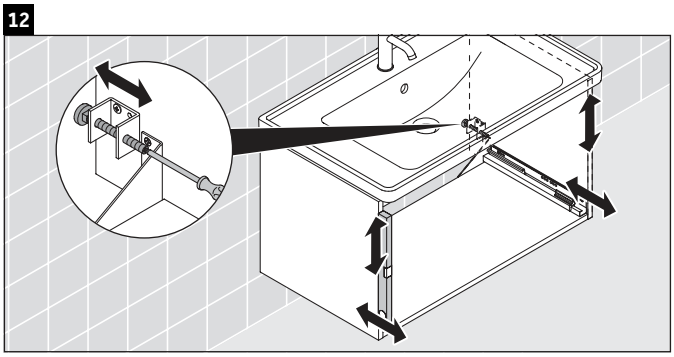

13

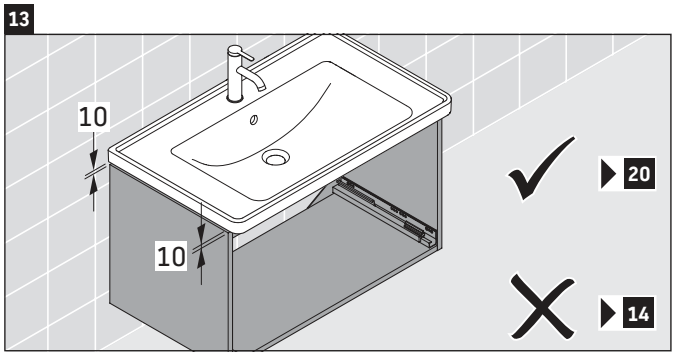

14

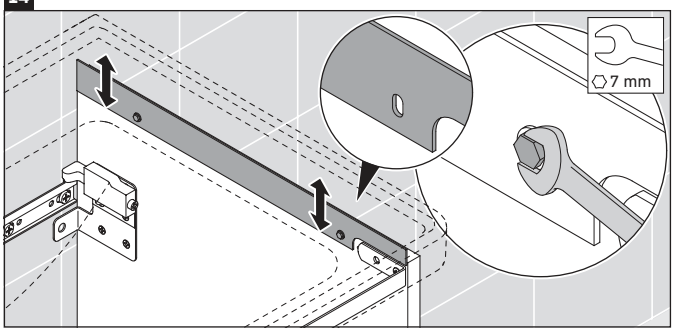

15

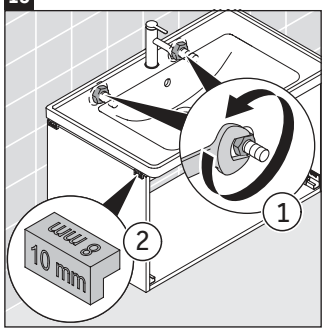

16

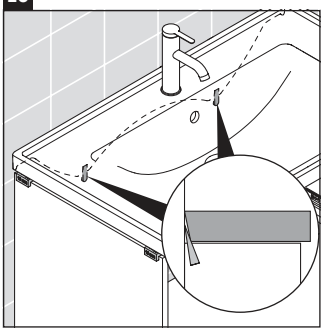

Order no. DE4254/21.01.1

Duravit AG, Werderstr. 36, 78132 Hornberg, Germany, Phone +49 78 33 700, Fax +49 78 33 70 289, info@duravit.de, www.duravit.de

17

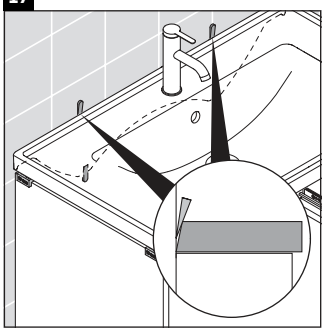

18

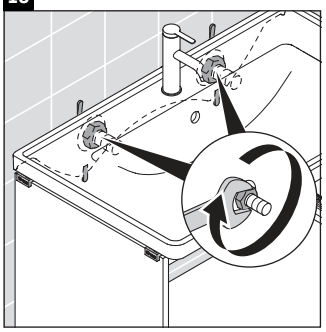

19

20

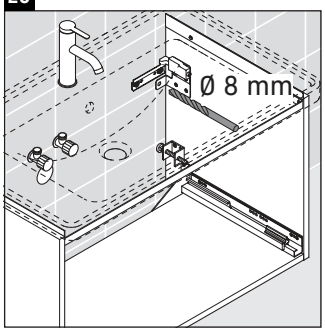

21

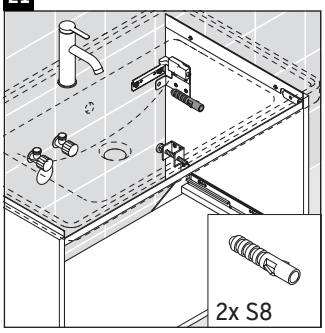

22

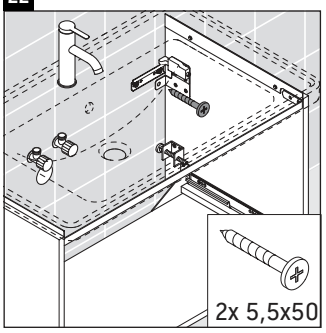

23

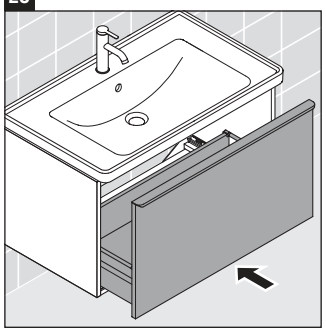

24

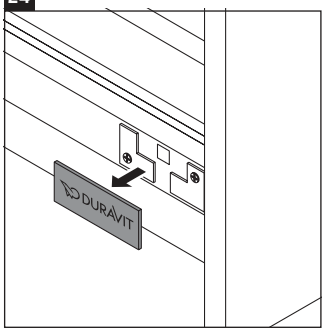

25

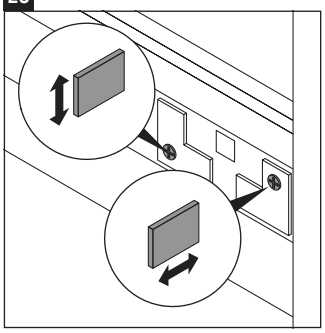

26

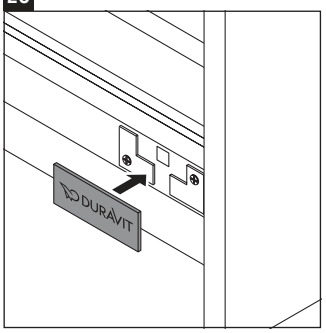

27

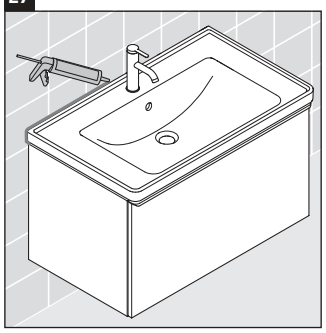

Order no. DE4254/21.01.1

Duravit AG, Werderstr. 36, 78132 Hornberg, Germany, Phone +49 78 33 700, Fax +49 78 33 70 289, info@duravit.de, www.duravit.de

Duravit AG
P.O. Box 240
Werderstr. 36
78132 Hornberg
Germany
Phone +49 78 33 70 0
Fax +49 78 33 70 289
info@duravit.com
www.duravit.com

Order no. DE4254/21.01.1

D-Neo # DE 4254

Montavimo instrukcija

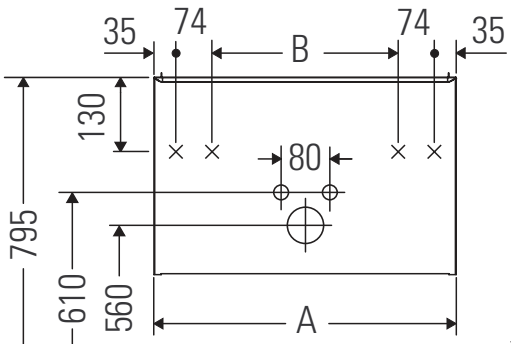

A mm	B mm	W mm	X mm
634	416	55	795

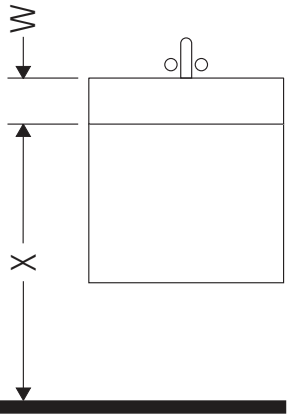

D-Neo # 236765

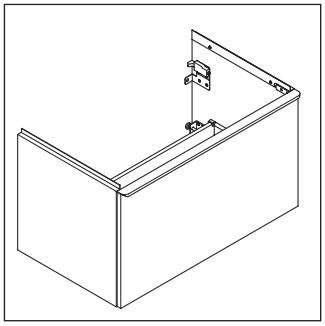

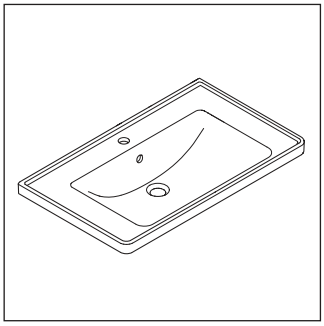

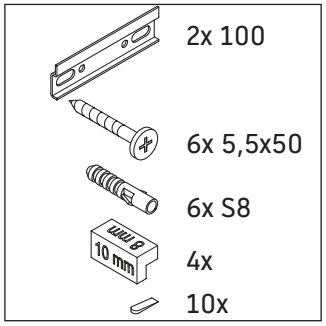

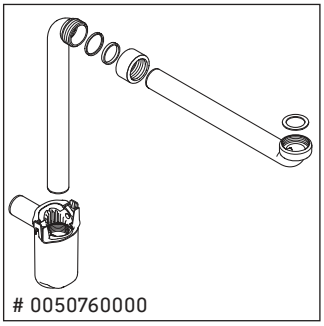

Taikymo nuorodos

Baldų serija atitinka pateikimo metu galiojusių standartų ir direktyvų reikalavimus. Baldai suprojektuoti vonios kambariui. Stenkitės baldų tiesiogiai neaptaškyti vandeniui, pvz., prausdamiesi duše.

Pasiliekama teisė daryti techninius patobulinimus ir keisti pavaizduotų gaminių išvaizdą.

1

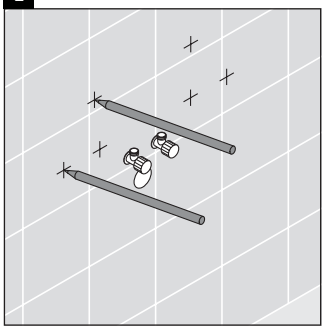

2

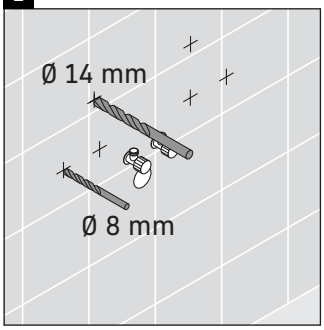

3

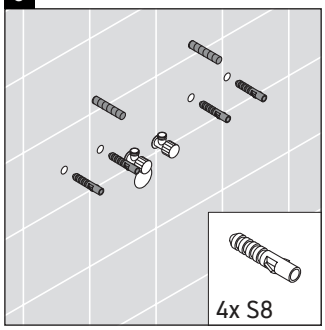

4

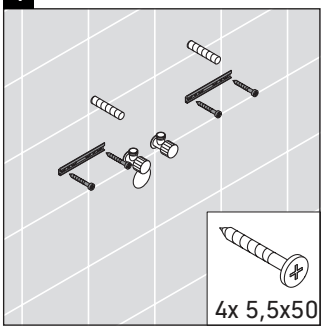

5

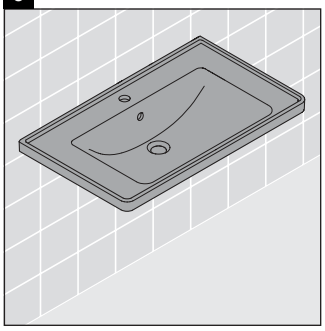

6

7

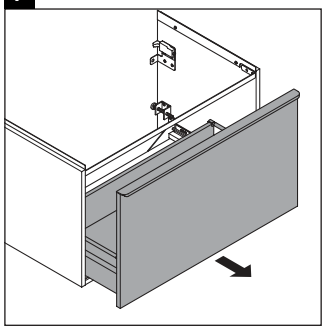

8

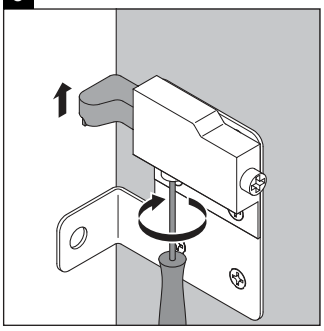

9

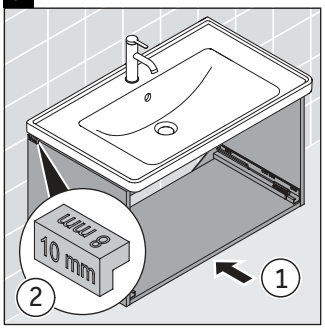

10

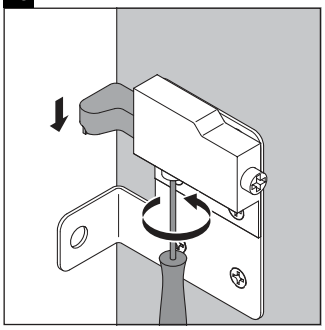

11

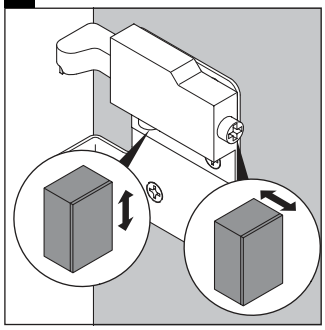

12

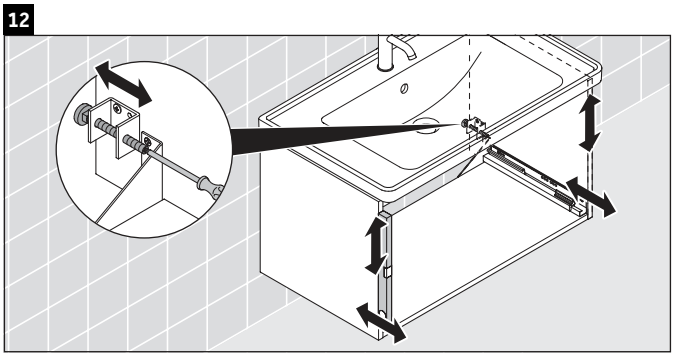

13

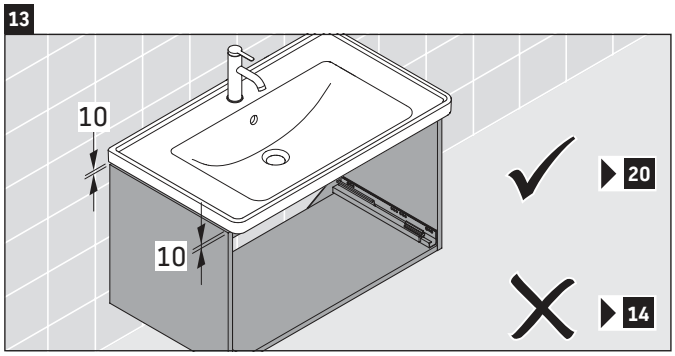

14

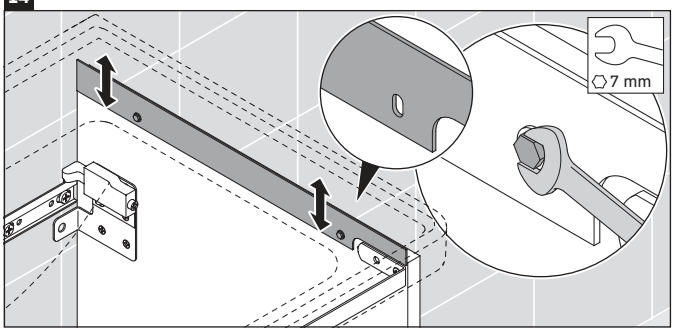

15

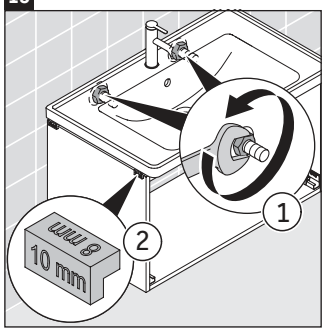

16

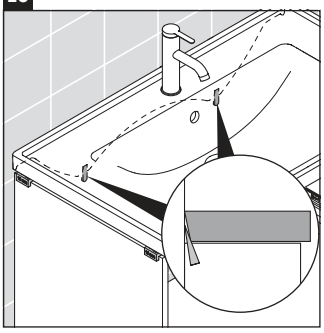

Order no. DE4254/21.01.1

Duravit AG, Werderstr. 36, 78132 Hornberg, Germany, Phone +49 78 33 700, Fax +49 78 33 70 289, info@duravit.de, www.duravit.de

17

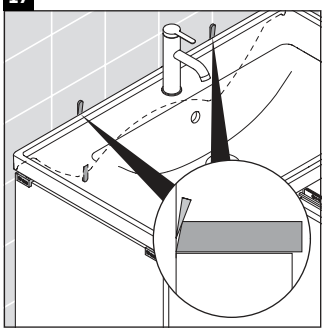

18

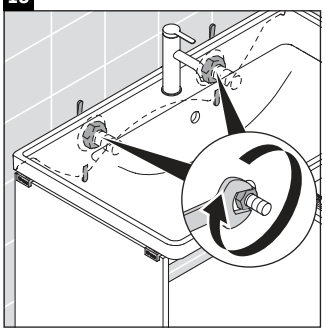

19

20

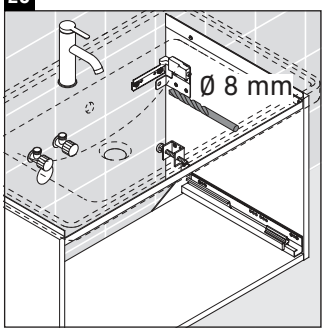

21

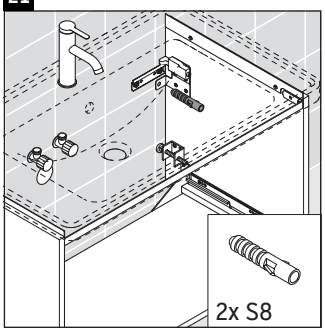

22

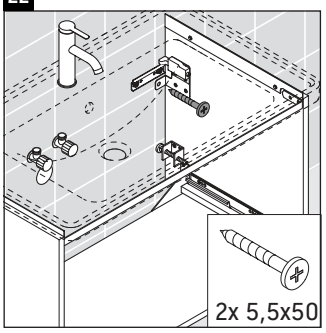

23

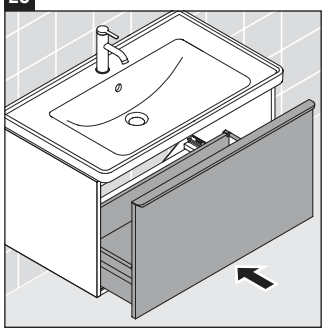

24

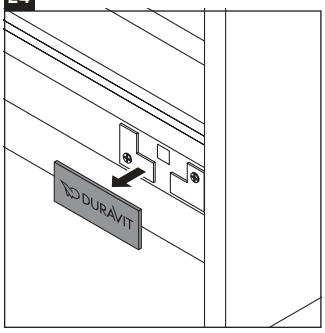

25

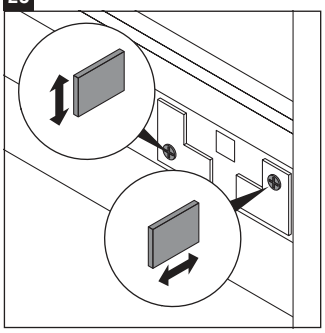

26

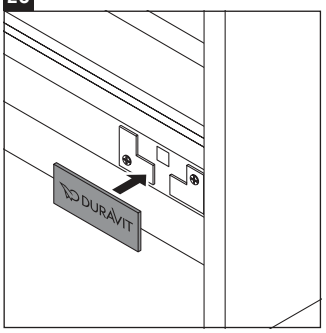

27

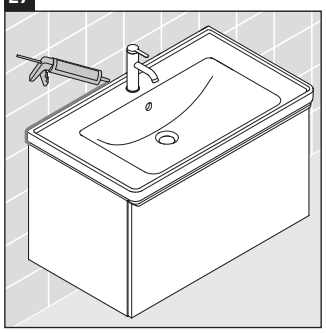

Order no. DE4254/21.01.1

Duravit AG, Werderstr. 36, 78132 Hornberg, Germany, Phone +49 78 33 700, Fax +49 78 33 70 289, info@duravit.de, www.duravit.de

Duravit AG
P.O. Box 240
Werderstr. 36
78132 Hornberg
Germany
Phone +49 78 33 70 0
Fax +49 78 33 70 289
info@duravit.com
www.duravit.com

Order no. DE4254/21.01.1

D-Neo # DE 4254

Paigaldusjuhend

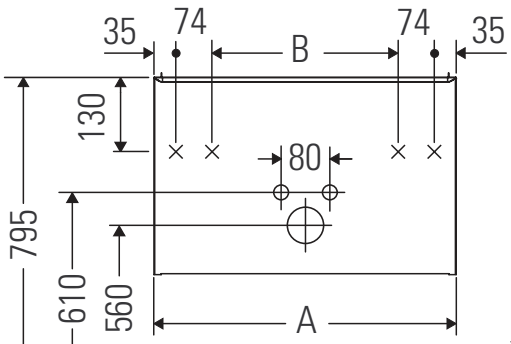

A mm	B mm	W mm	X mm
634	416	55	795

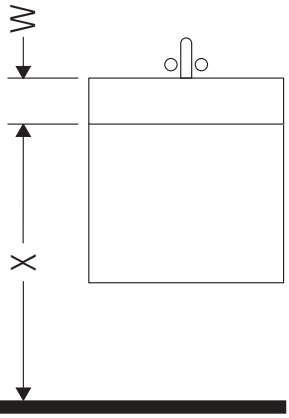

D-Neo # 236765

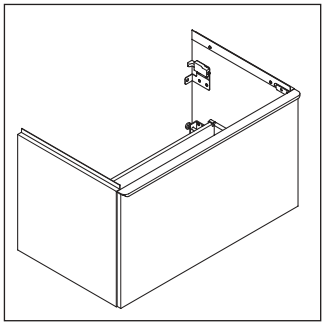

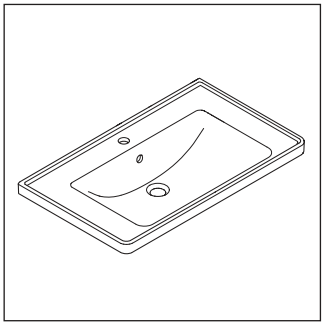

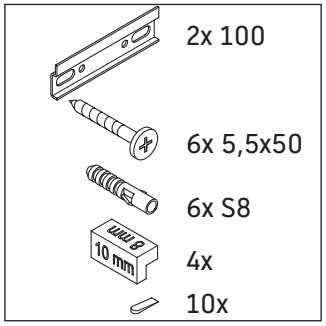

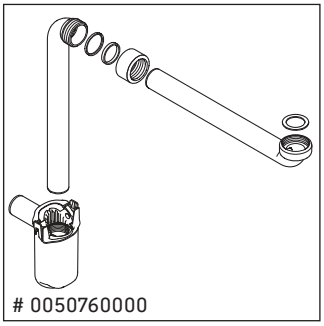

Kasutusjuhised

Vannitoamööbel vastab kehtivatele normidele ja direktiividele mööbli tarnimise ajahetkel ja mööbel on mõeldud kasutamiseks vannitubades. Vältige mööbli otsest kokkupuudet veega.

Me jätame endale esitatud toodetel tehniliste täiustuste ja optiliste muudatuste tegemise õiguse.

1

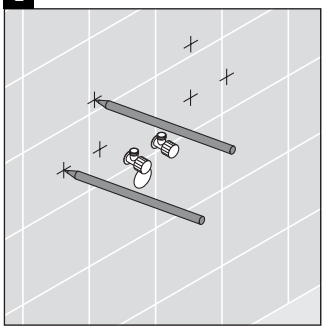

2

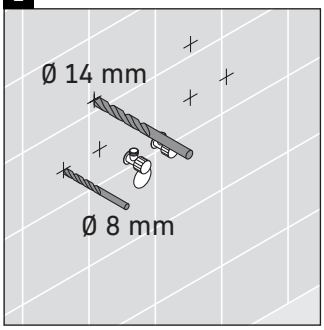

3

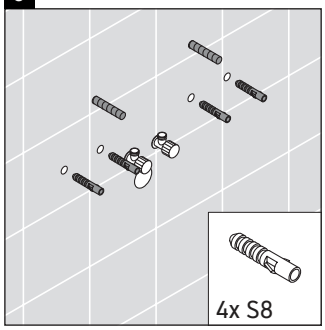

4

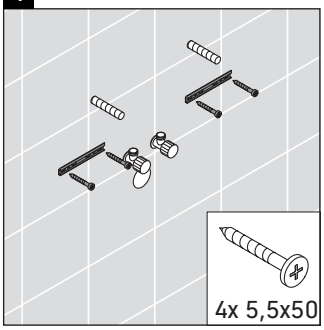

5

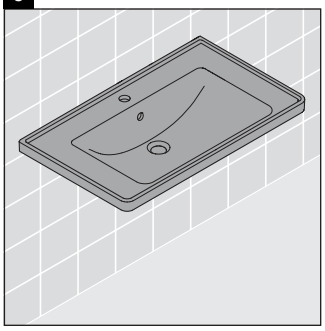

6

7

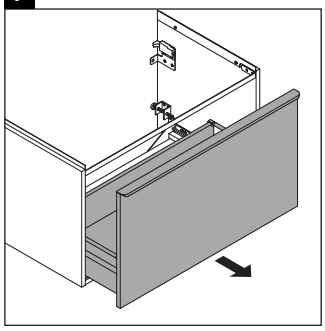

8

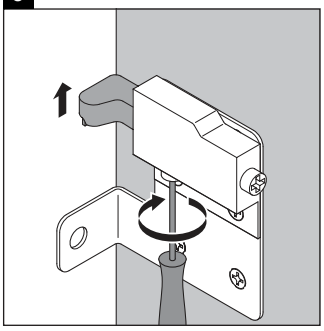

9

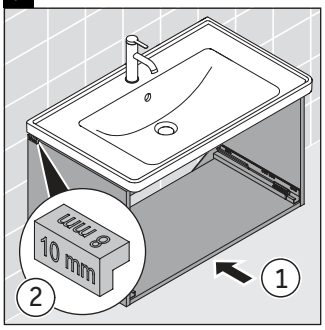

10

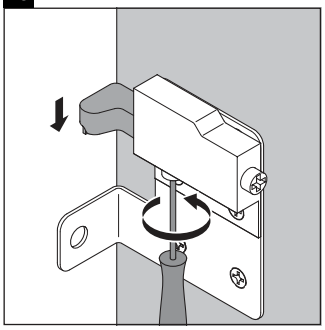

11

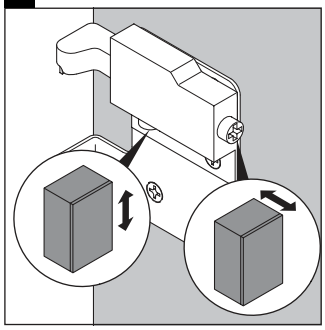

12

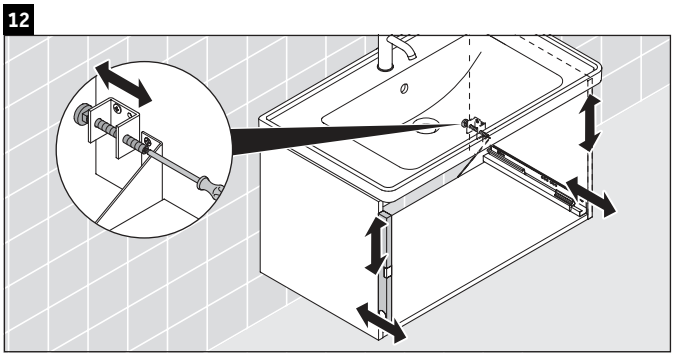

13

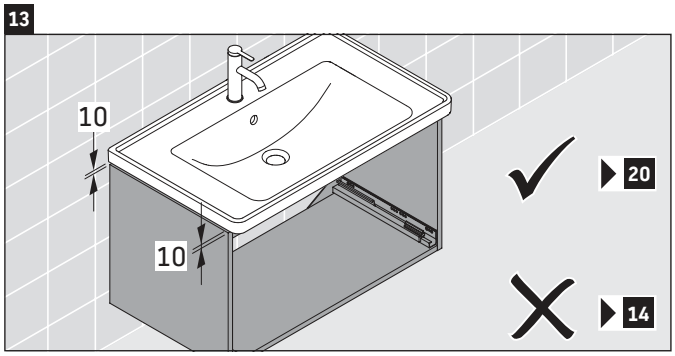

14

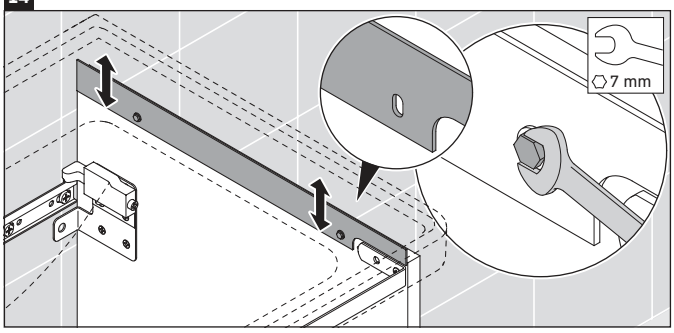

15

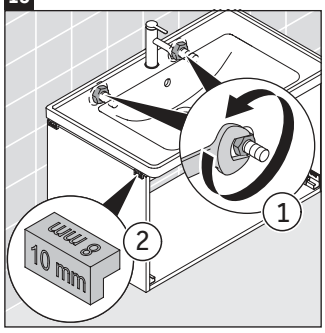

16

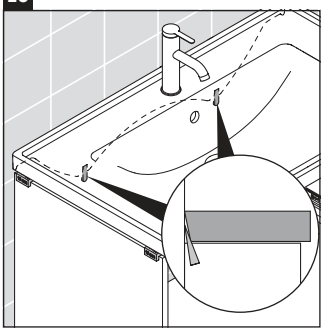

Order no. DE4254/21.01.1

Duravit AG, Werderstr. 36, 78132 Hornberg, Germany, Phone +49 78 33 700, Fax +49 78 33 70 289, info@duravit.de, www.duravit.de

17

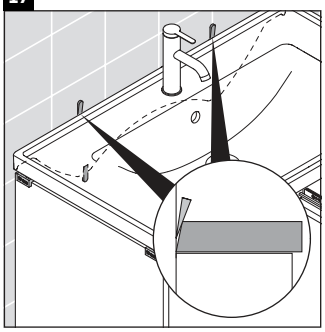

18

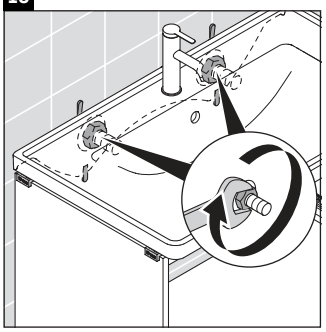

19

20

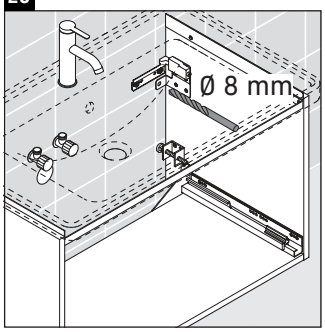

21

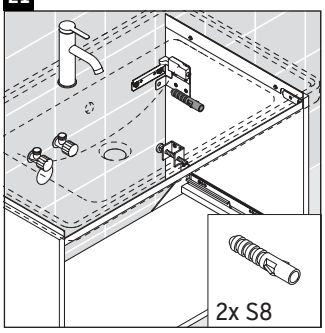

22

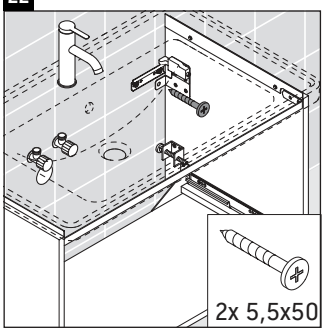

23

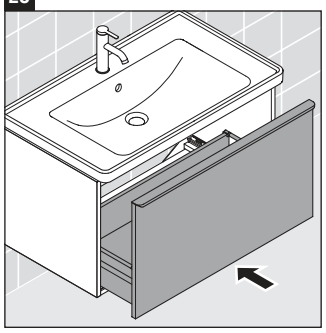

24

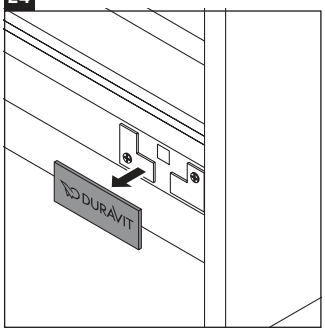

25

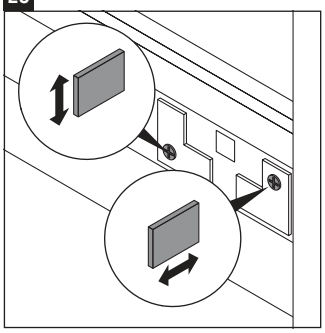

26

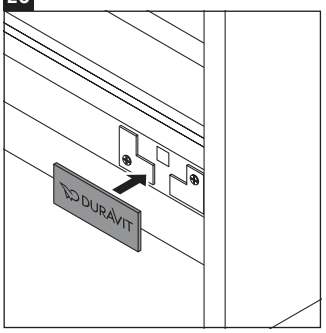

27

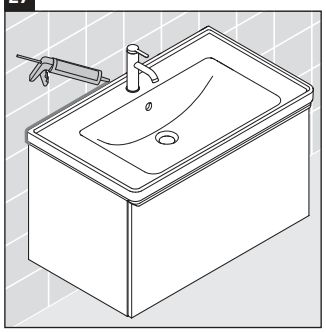

Order no. DE4254/21.01.1

Duravit AG, Werderstr. 36, 78132 Hornberg, Germany, Phone +49 78 33 700, Fax +49 78 33 70 289, info@duravit.de, www.duravit.de

Duravit AG
P.O. Box 240
Werderstr. 36
78132 Hornberg
Germany
Phone +49 78 33 70 0
Fax +49 78 33 70 289
info@duravit.com
www.duravit.com

Order no. DE4254/21.01.1

D-Neo # DE 4254

Návod na montáž

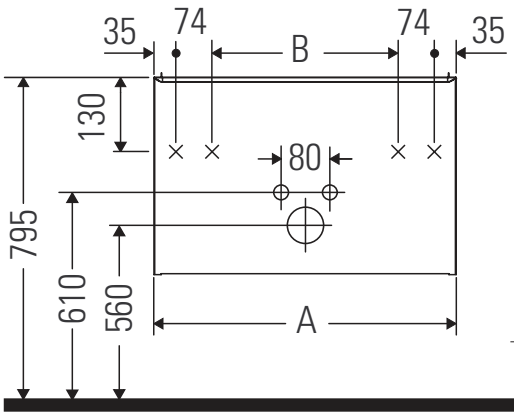

A mm	B mm	W mm	X mm
634	416	55	795

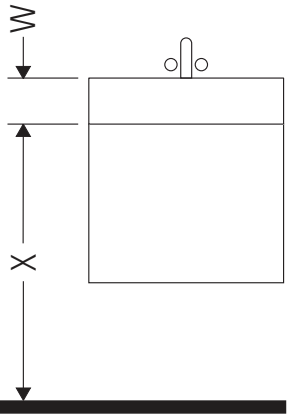

D-Neo # 236765

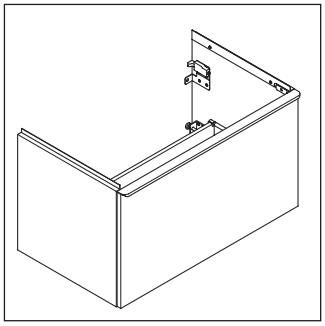

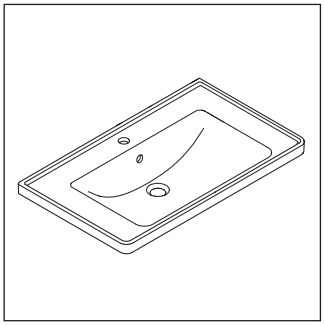

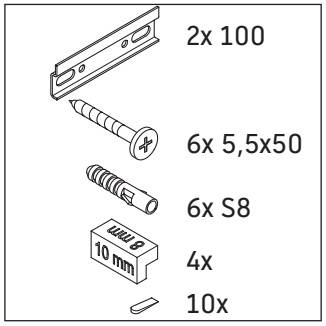

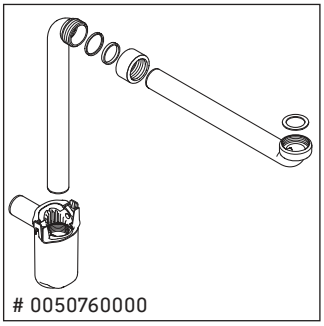

Návod k použitiu

Rad kúpeľňového nábytku spĺňa v okamihu expedície požiadavky príslušných noriem a smerníc a je navrhnutý pre použitie v kúpeľniach. Treba sa vyhýbať priamemu kontaktu s vodou napr. pri sprchovaní.

Vyhradzujeme si právo na technické vylepšenia a optické zmeny vyobrazených produktov.

1

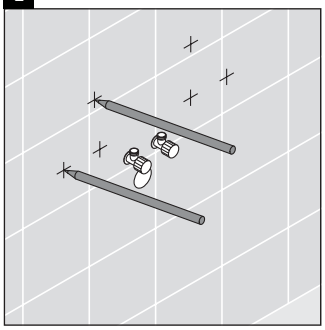

2

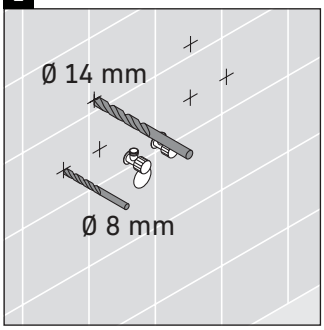

3

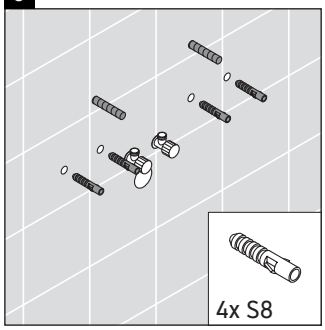

4

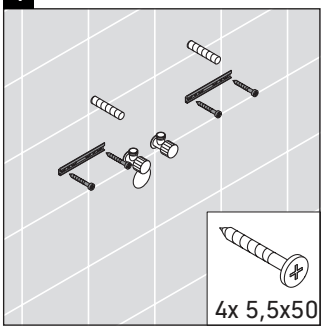

5

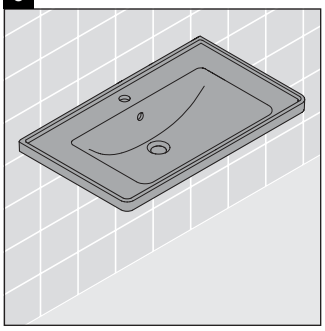

6

7

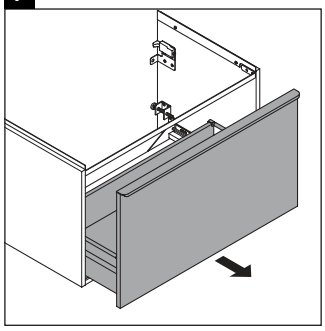

8

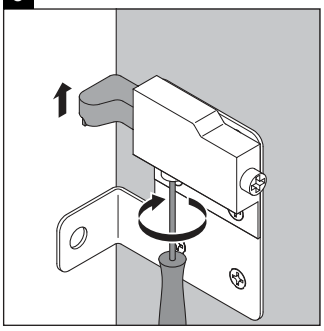

9

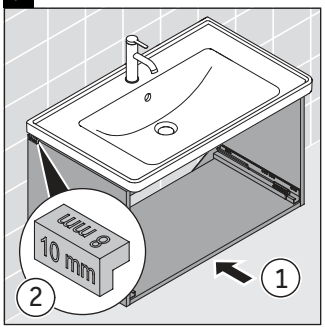

10

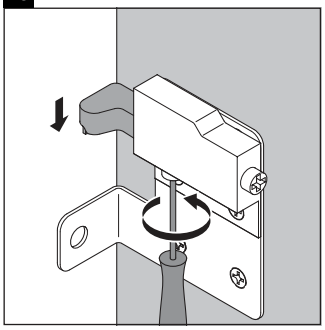

11

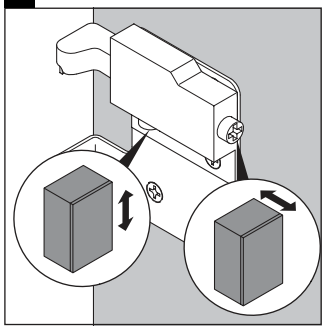

12

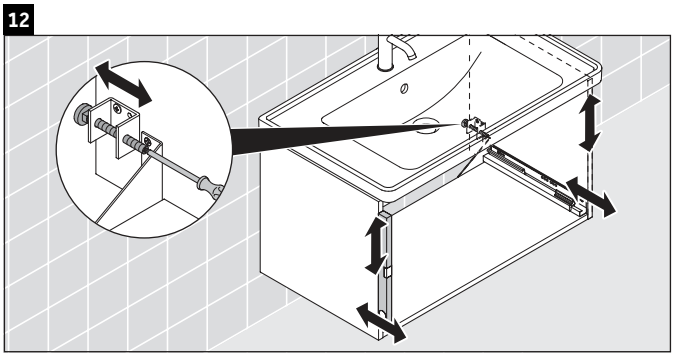

13

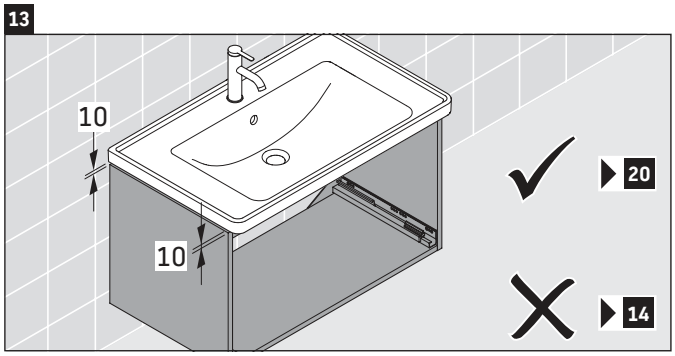

14

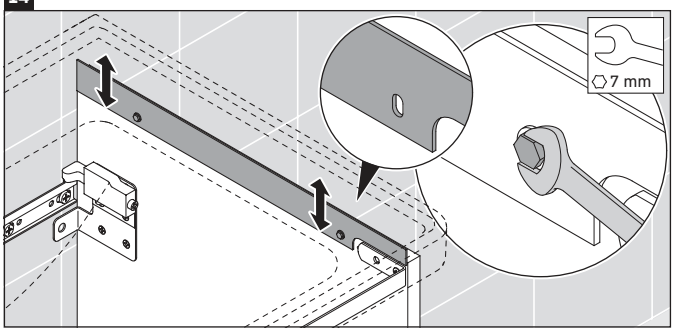

15

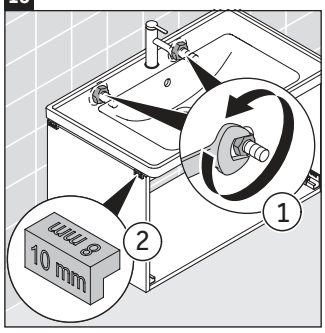

16

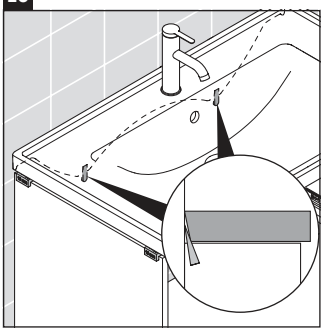

Order no. DE4254/21.01.1

Duravit AG, Werderstr. 36, 78132 Hornberg, Germany, Phone +49 78 33 700, Fax +49 78 33 70 289, info@duravit.de, www.duravit.de

17

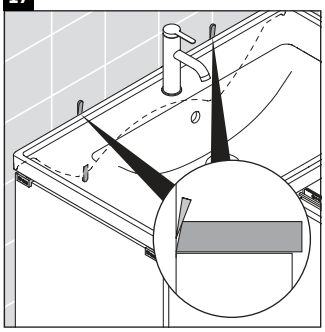

18

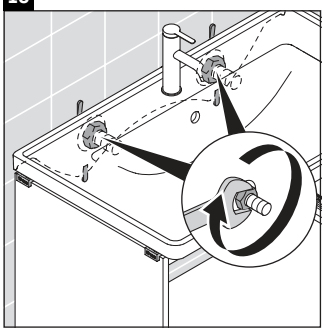

19

20

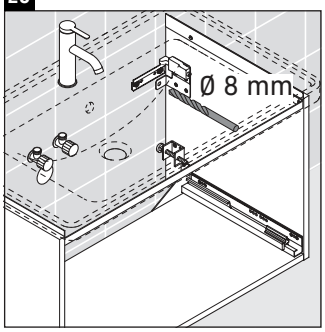

21

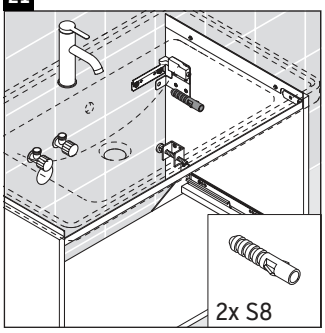

22

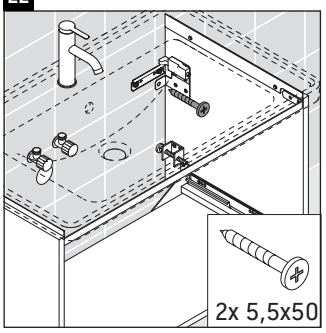

23

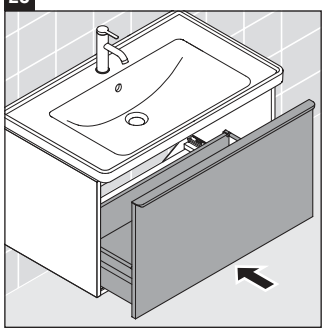

24

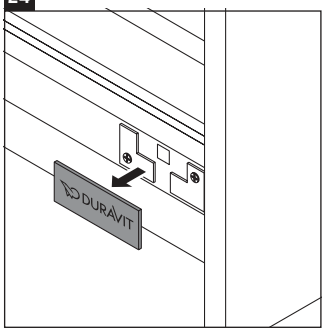

25

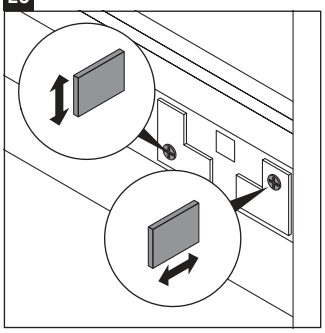

26

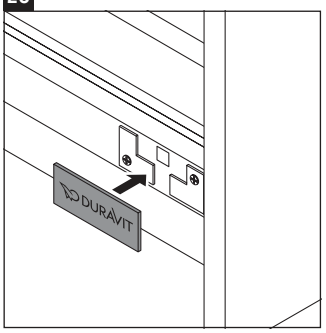

27

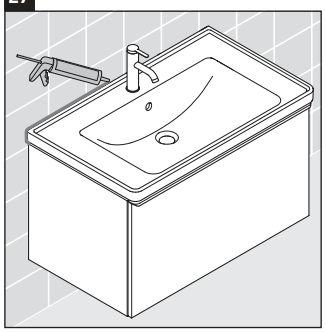

Order no. DE4254/21.01.1

Duravit AG, Werderstr. 36, 78132 Hornberg, Germany, Phone +49 78 33 700, Fax +49 78 33 70 289, info@duravit.de, www.duravit.de

Duravit AG
P.O. Box 240
Werderstr. 36
78132 Hornberg
Germany
Phone +49 78 33 70 0
Fax +49 78 33 70 289
info@duravit.com
www.duravit.com

Order no. DE4254/21.01.1

D-Neo # DE 4254

Upute za montažu

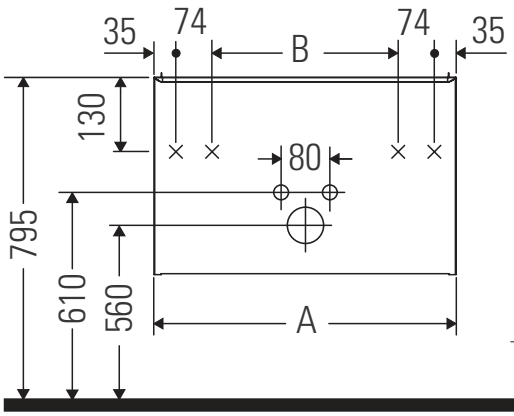

A mm	B mm	W mm	X mm
634	416	55	795

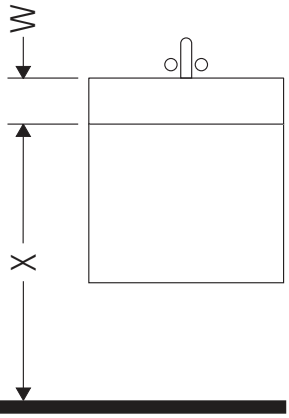

D-Neo # 236765

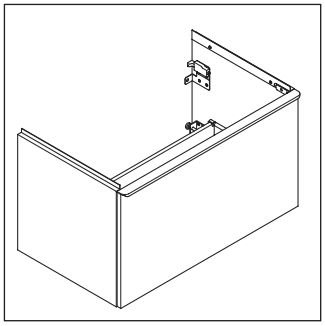

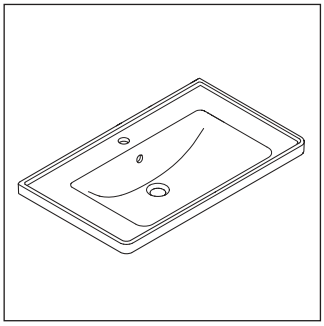

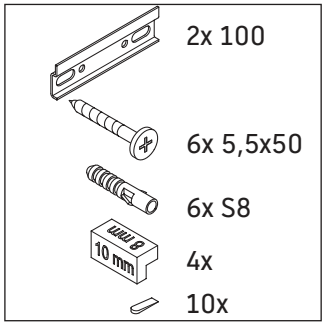

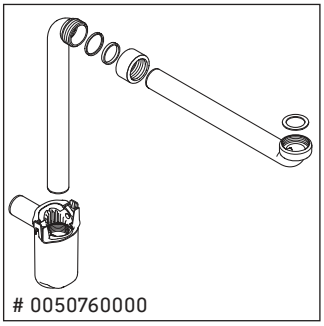

Napomene za uporabu

Serija kupaonskog namještaja odgovara normama i direktivama važećima u trenutku isporuke, a namijenjena je uporabi u kupaonicama. Izbjegavajte prskanje vodom, primjerice tijekom tuširanja.

Zadržavamo pravo na tehnička poboljšanja i optičke promjene na prikazanim proizvodima.

1

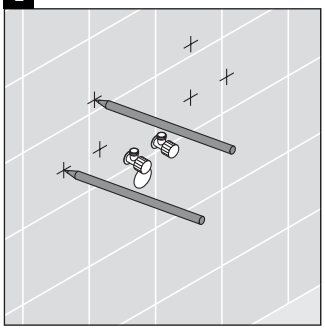

2

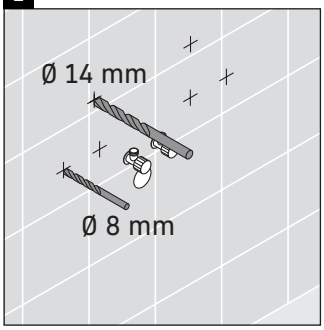

3

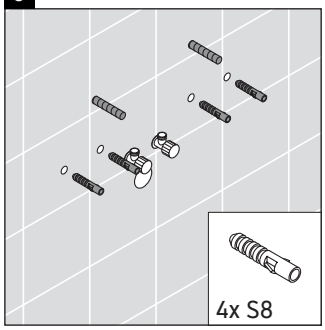

4

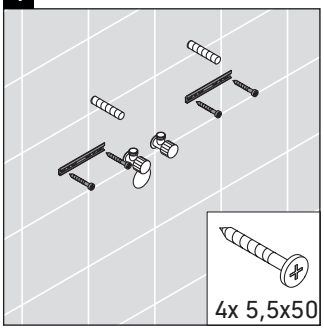

5

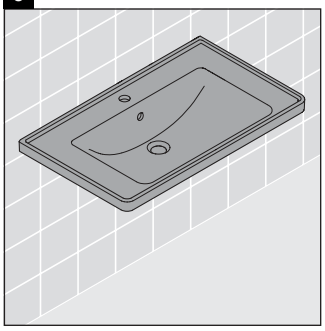

6

7

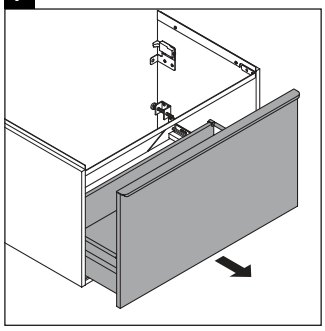

8

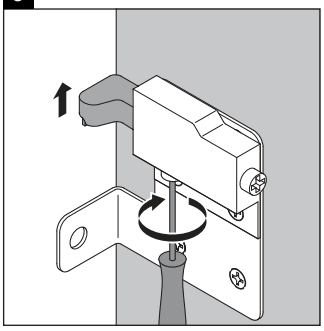

9

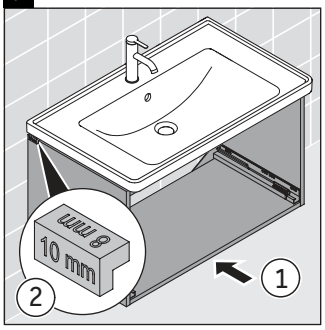

10

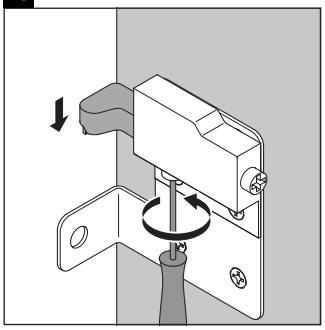

11

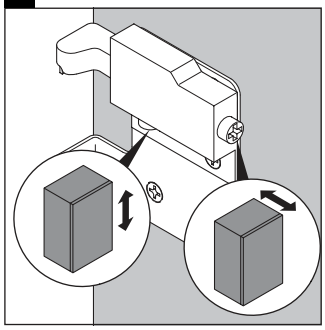

12

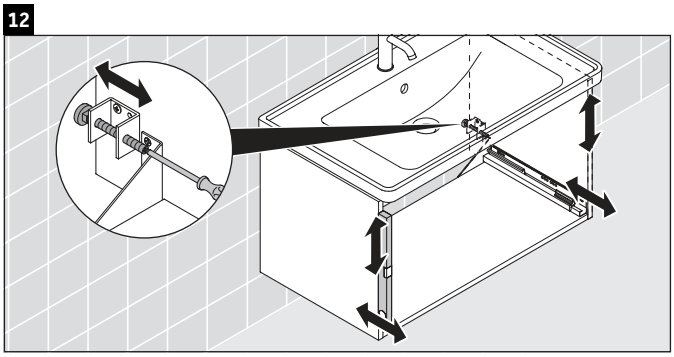

13

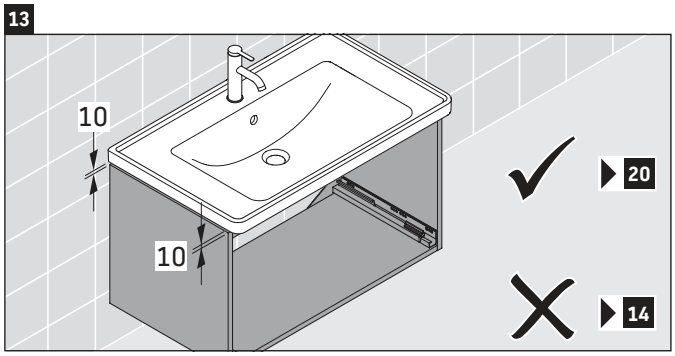

14

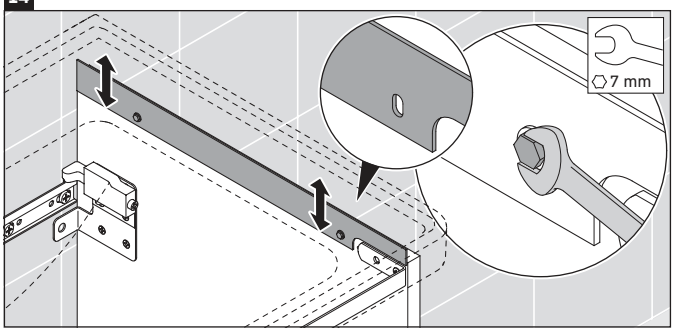

15

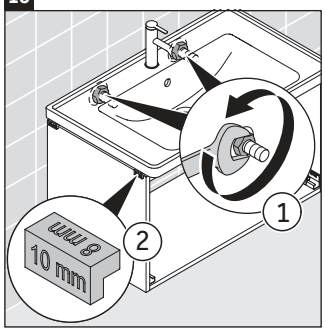

16

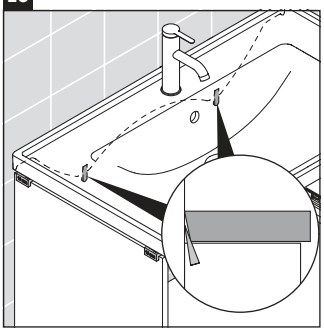

Order no. DE4254/21.01.1

Duravit AG, Werderstr. 36, 78132 Hornberg, Germany, Phone +49 78 33 700, Fax +49 78 33 70 289, info@duravit.de, www.duravit.de

17

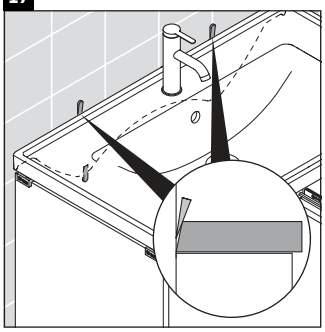

18

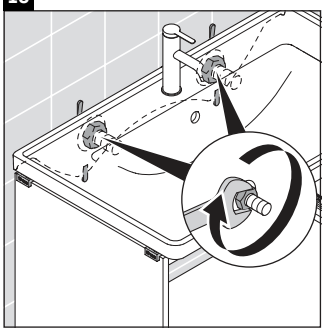

19

20

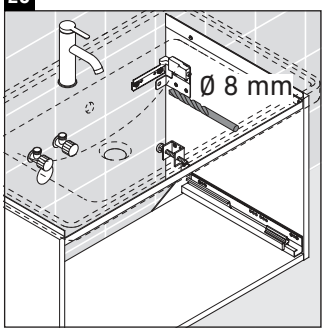

21

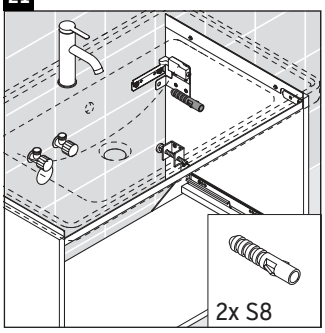

22

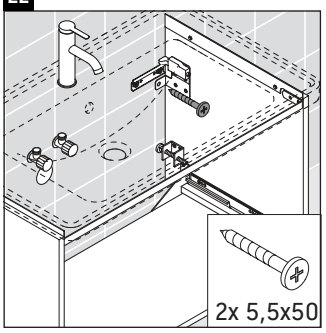

23

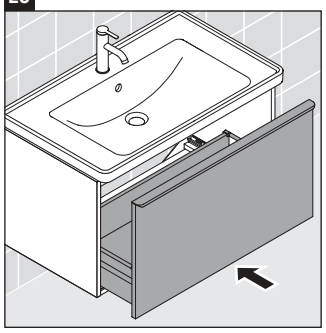

24

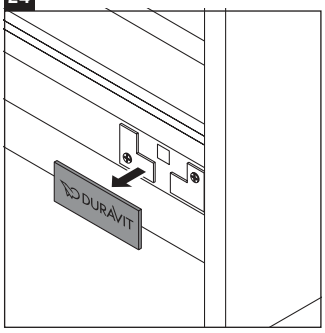

25

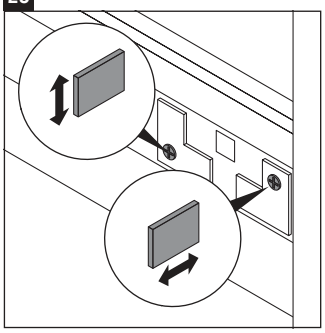

26

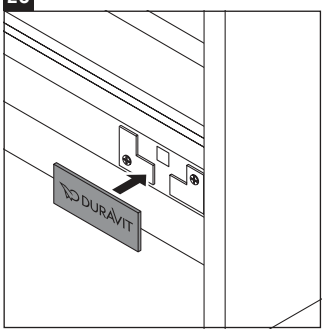

27

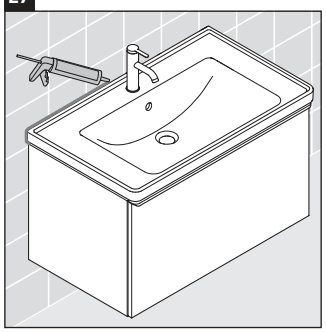

Order no. DE4254/21.01.1

Duravit AG, Werderstr. 36, 78132 Hornberg, Germany, Phone +49 78 33 700, Fax +49 78 33 70 289, info@duravit.de, www.duravit.de

Duravit AG
P.O. Box 240
Werderstr. 36
78132 Hornberg
Germany
Phone +49 78 33 70 0
Fax +49 78 33 70 289
info@duravit.com
www.duravit.com

Order no. DE4254/21.01.1

D-Neo # DE 4254

Instrucțiuni de montare

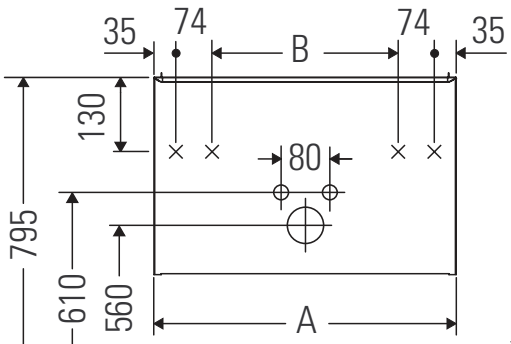

A mm	B mm	W mm	X mm
634	416	55	795

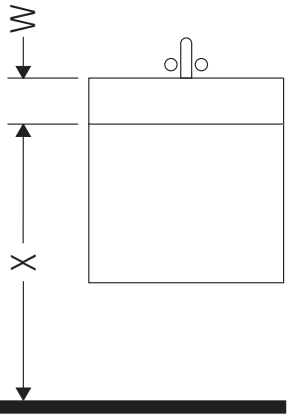

D-Neo # 236765

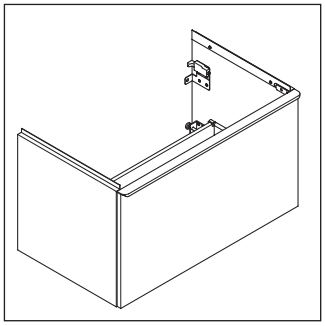

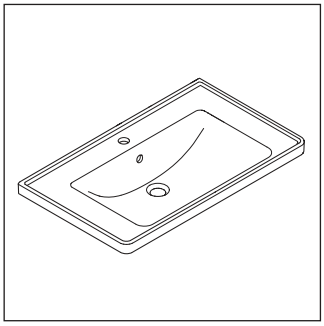

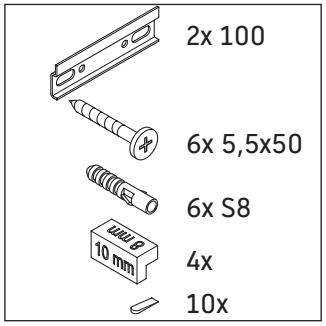

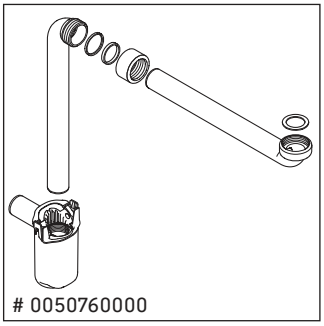

Indicații de utilizare

Seria de mobilier de baie corespunde normelor şi directivelor valabile în momentul livrării şi este concepută pentru utilizarea în băi. Trebuie evitată stropirea directă cu apă, de ex. în timpul duşului.

Ne rezervăm dreptul de a efectua îmbunătățiri tehnice şi modificări optice la produsele din poze.

1

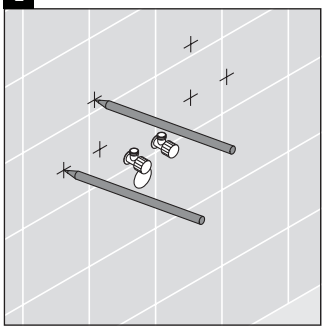

2

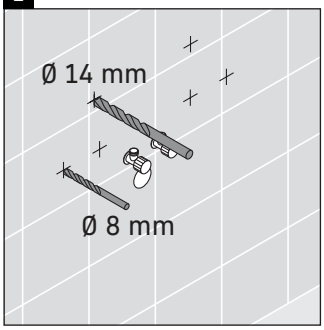

3

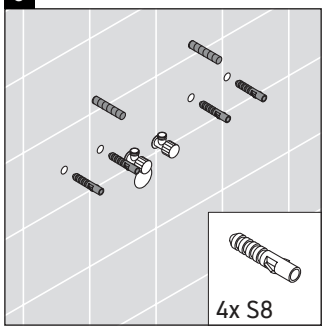

4

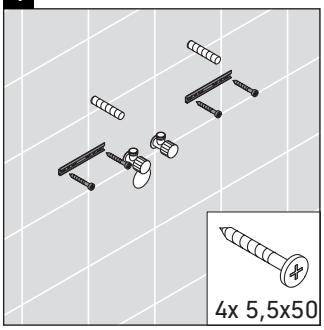

5

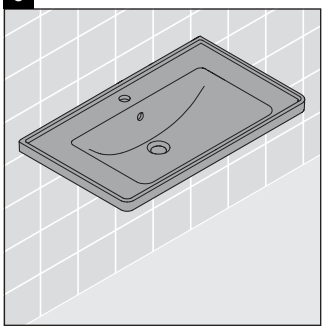

6

7

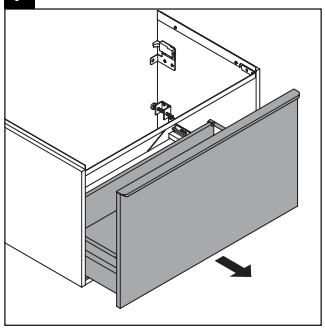

8

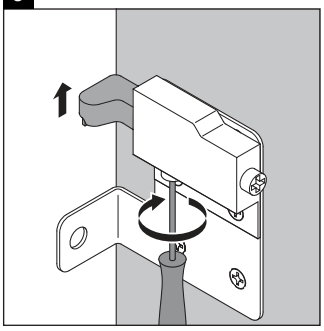

9

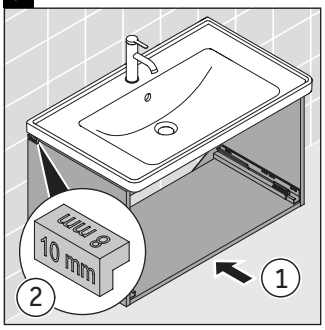

10

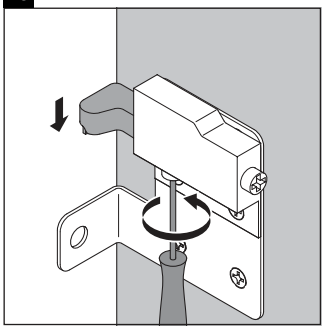

11

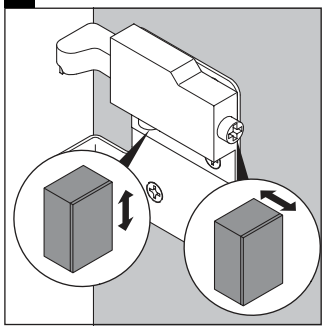

12

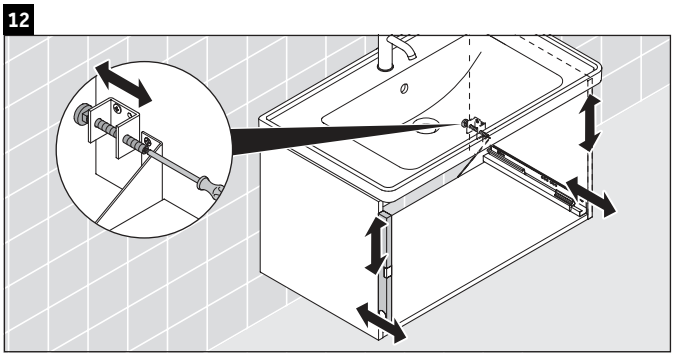

13

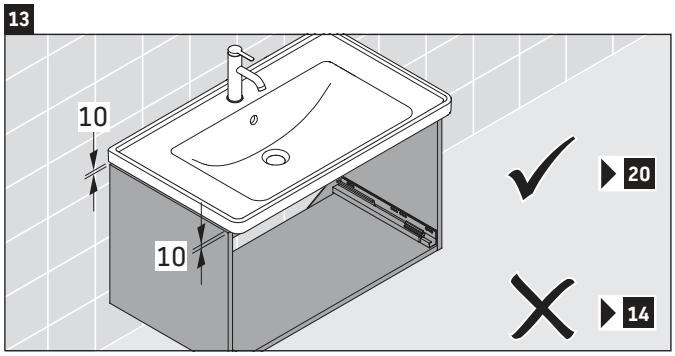

14

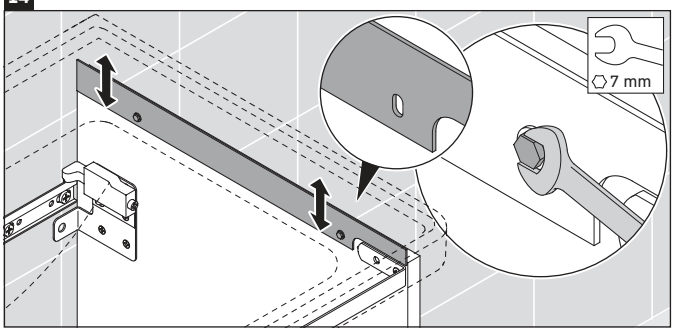

15

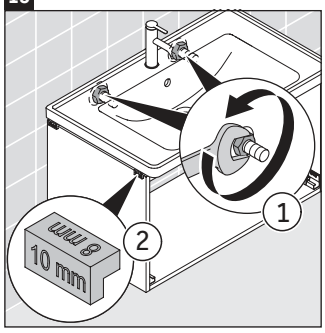

16

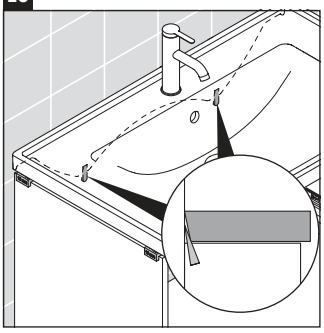

Order no. DE4254/21.01.1

Duravit AG, Werderstr. 36, 78132 Hornberg, Germany, Phone +49 78 33 700, Fax +49 78 33 70 289, info@duravit.de, www.duravit.de

17

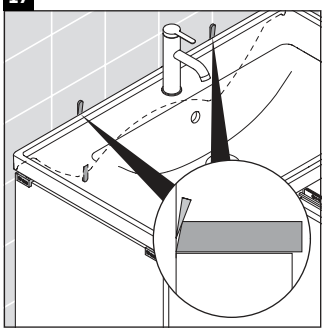

18

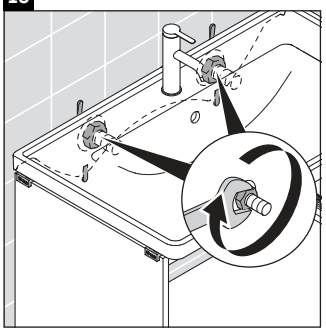

19

20

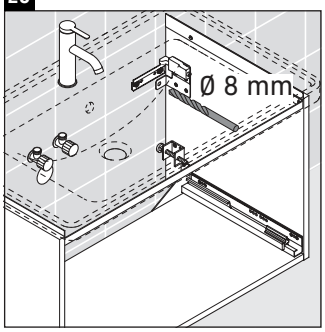

21

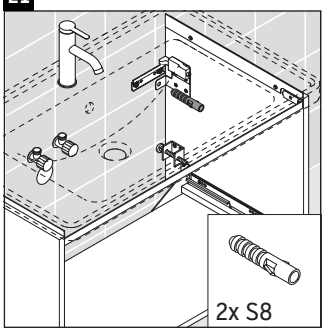

22

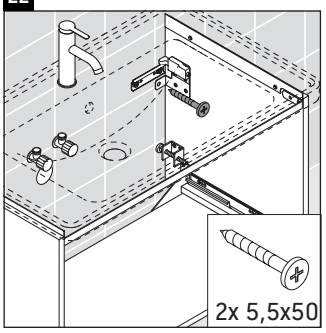

23

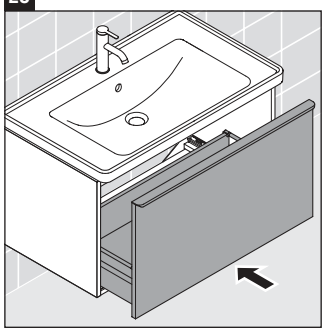

24

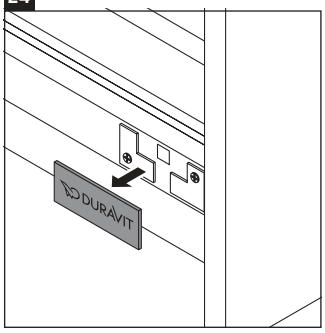

25

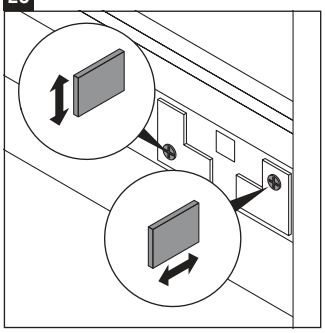

26

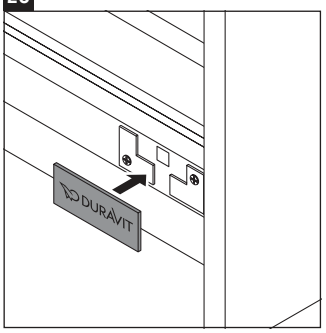

27

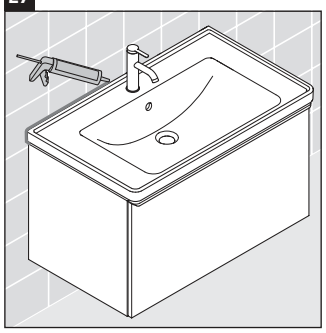

Order no. DE4254/21.01.1

Duravit AG, Werderstr. 36, 78132 Hornberg, Germany, Phone +49 78 33 700, Fax +49 78 33 70 289, info@duravit.de, www.duravit.de

Duravit AG
P.O. Box 240
Werderstr. 36
78132 Hornberg
Germany
Phone +49 78 33 70 0
Fax +49 78 33 70 289
info@duravit.com
www.duravit.com

Order no. DE4254/21.01.1

D-Neo # DE 4254

Instruções de montagem

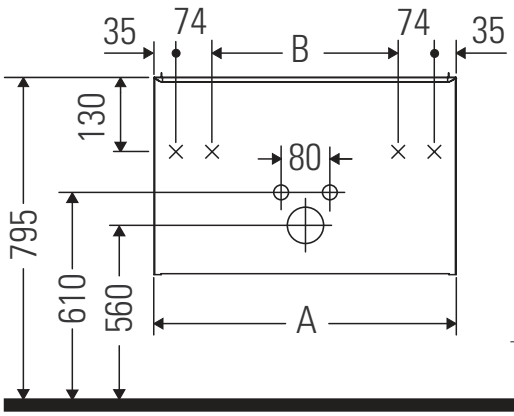

A mm	B mm	W mm	X mm
634	416	55	795

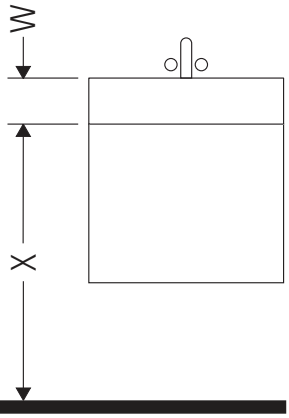

D-Neo # 236765

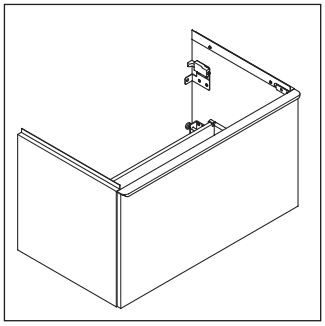

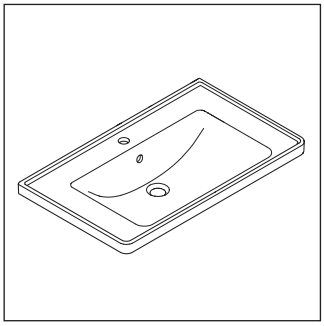

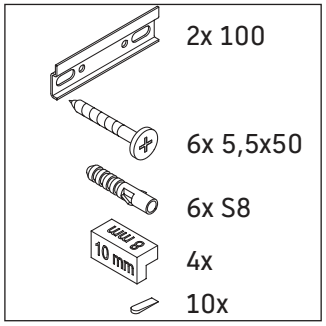

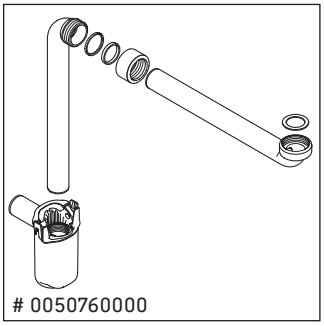

Indicações de uso

O mobiliário de casa de banho está em conformidade com as normas e directivas em vigor no momento do fornecimento e é projetado para uso em casas de banho. A umectação directa com água, por exemplo durante o banho, deve ser evitada.

Reservamo-nos o direito a melhoramentos técnicos e a alterações ao nível visual dos produtos ilustrados.

1

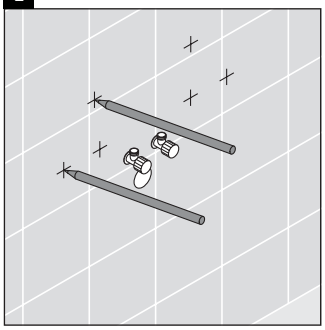

2

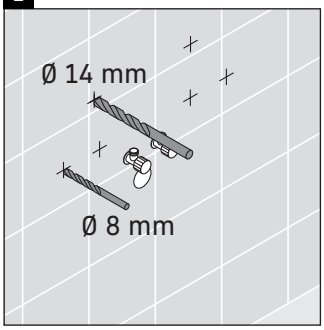

3

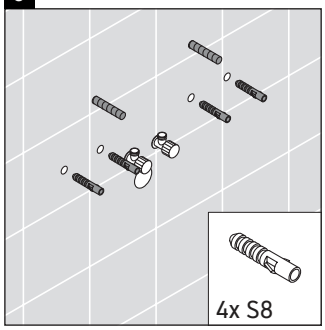

4

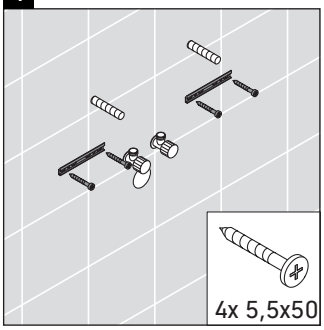

5

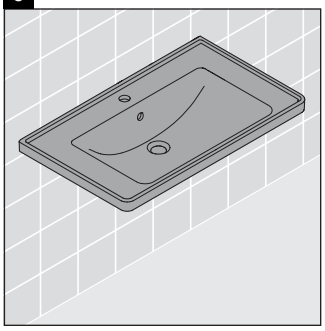

6

7

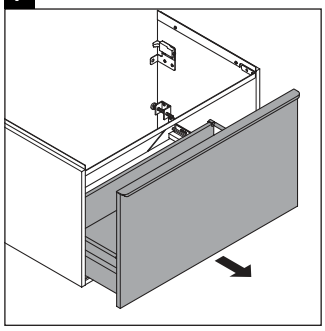

8

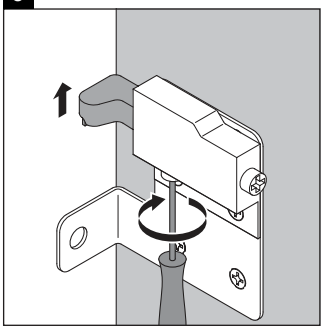

9

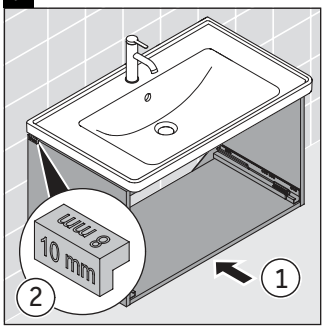

10

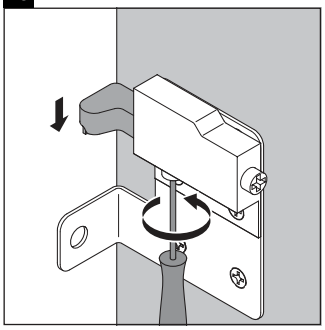

11

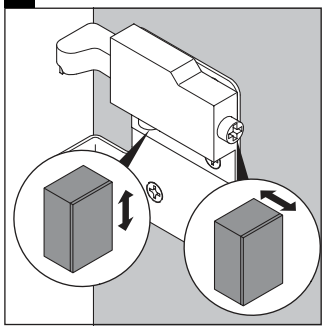

12

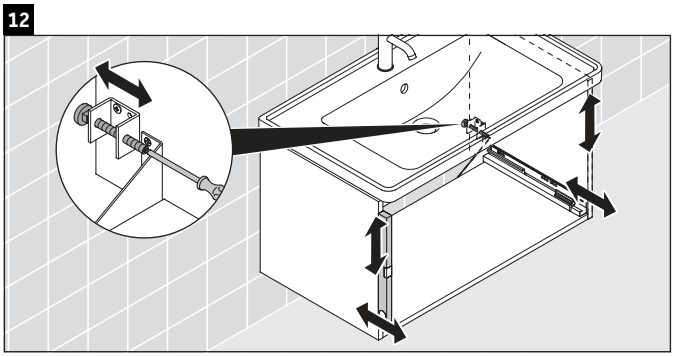

13

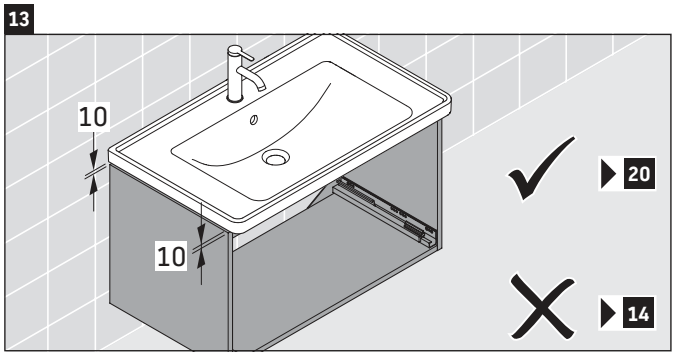

14

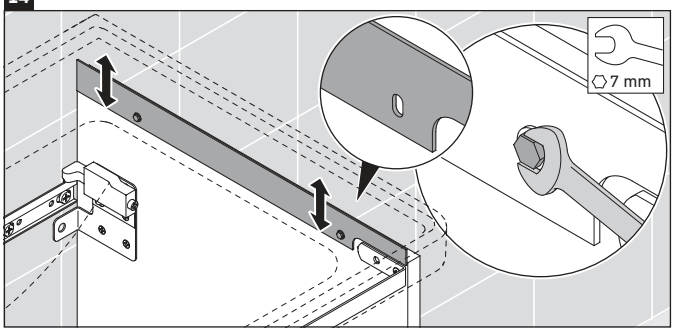

15

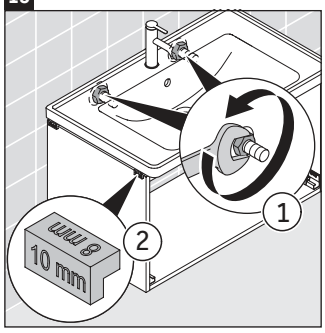

16

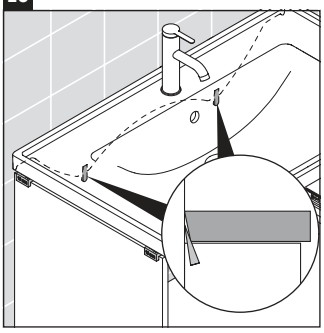

Order no. DE4254/21.01.1

Duravit AG, Werderstr. 36, 78132 Hornberg, Germany, Phone +49 78 33 700, Fax +49 78 33 70 289, info@duravit.de, www.duravit.de

17

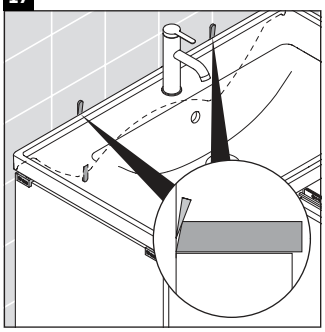

18

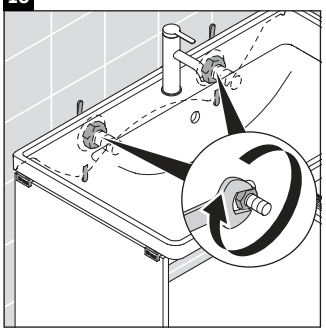

19

20

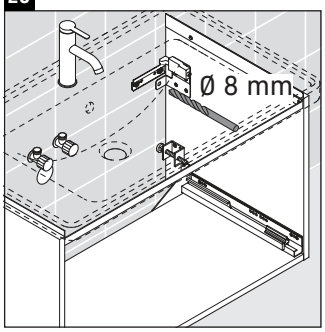

21

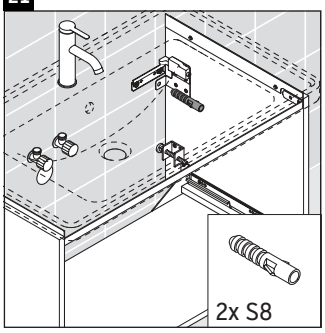

22

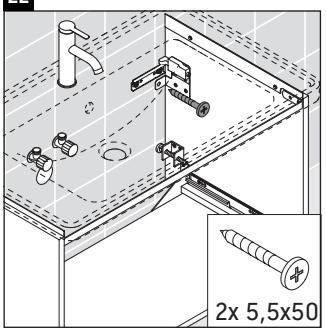

23

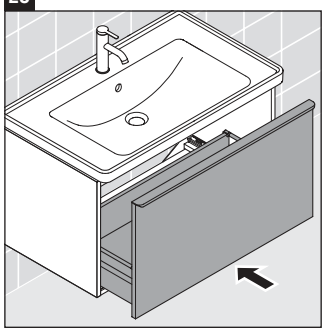

24

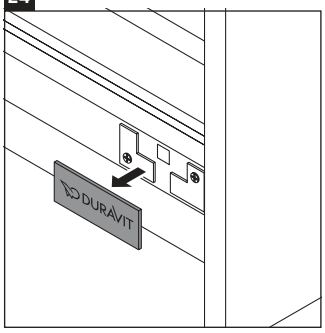

25

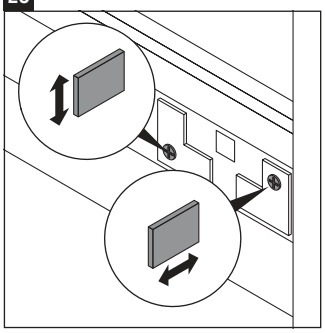

26

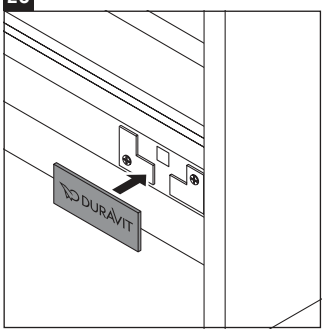

27

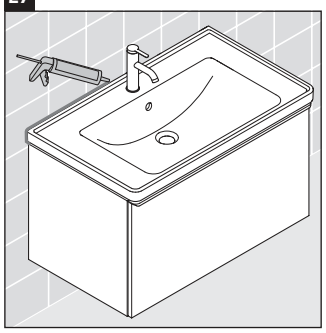

Order no. DE4254/21.01.1

Duravit AG, Werderstr. 36, 78132 Hornberg, Germany, Phone +49 78 33 700, Fax +49 78 33 70 289, info@duravit.de, www.duravit.de

Duravit AG
P.O. Box 240
Werderstr. 36
78132 Hornberg
Germany
Phone +49 78 33 70 0
Fax +49 78 33 70 289
info@duravit.com
www.duravit.com

Order no. DE4254/21.01.1

D-Neo # DE 4254

Asennusohje

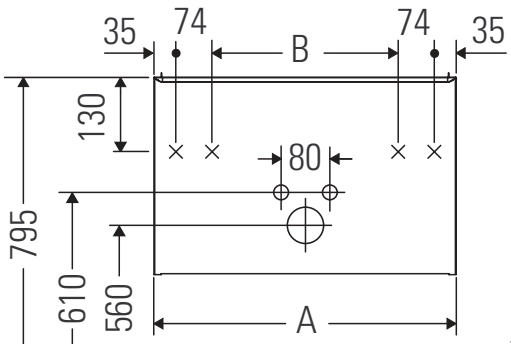

A mm	B mm	W mm	X mm
634	416	55	795

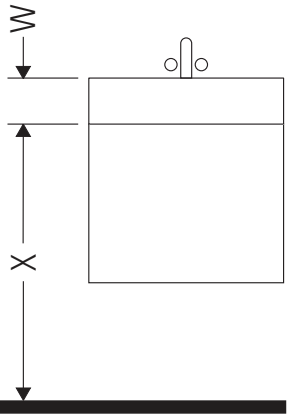

D-Neo # 236765

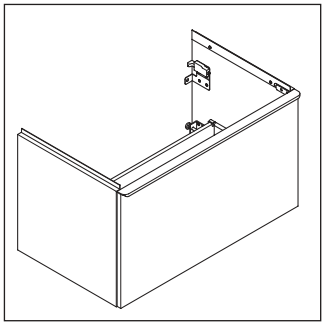

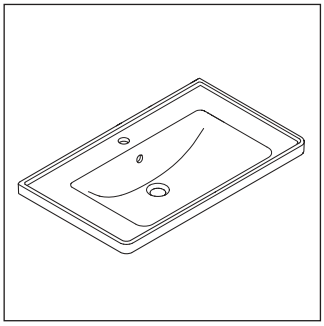

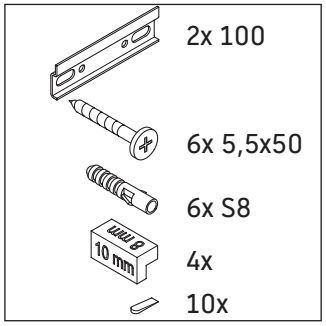

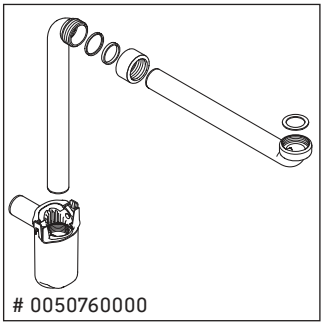

Käyttöohjeet

Kylpyhuonekalustosarja vastaa toimitusajankohtana voimassa olevia standardeja ja direktiivejä ja on suunniteltu käytettäväksi kylpyhuoneissa. Suoraa kastelua vedellä esim. suihkun aikana tulee välttää.

Pidätämme oikeuden kuvattujen tuotteiden teknisiin ja ulkonäköä koskeviin muutoksiin.

1

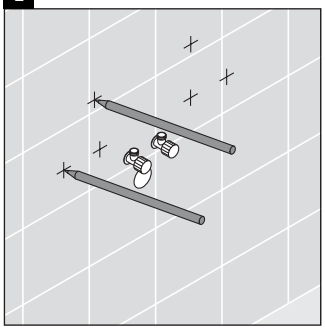

2

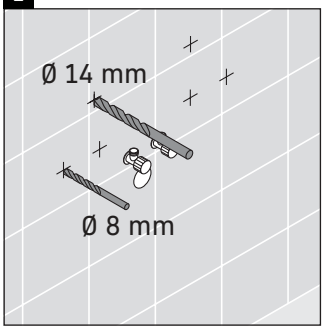

3

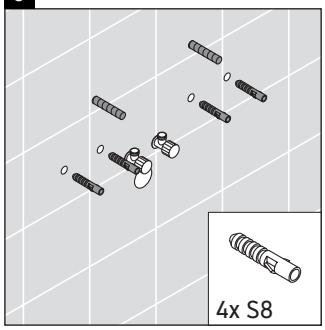

4

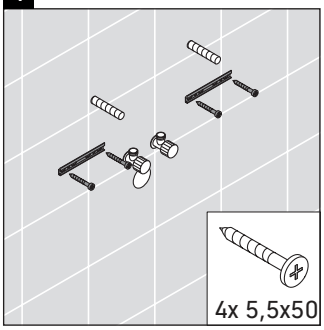

5

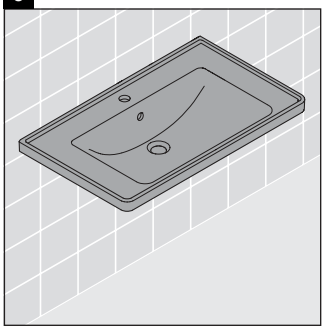

6

7

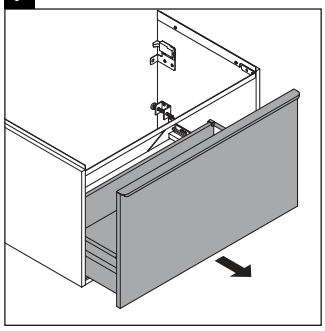

8

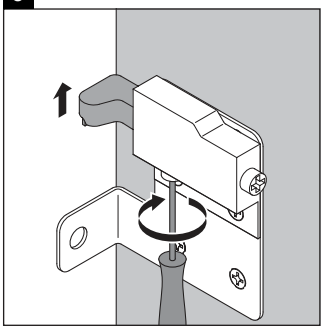

9

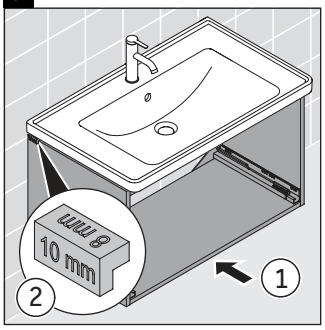

10

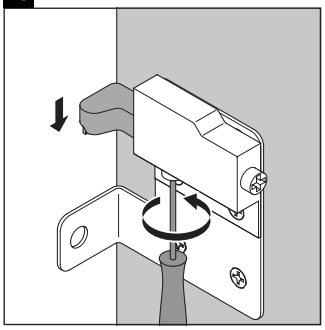

11

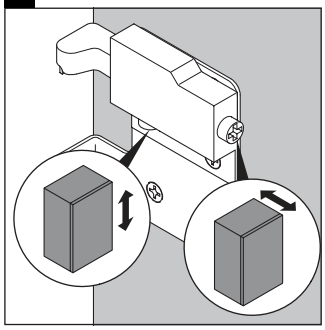

12

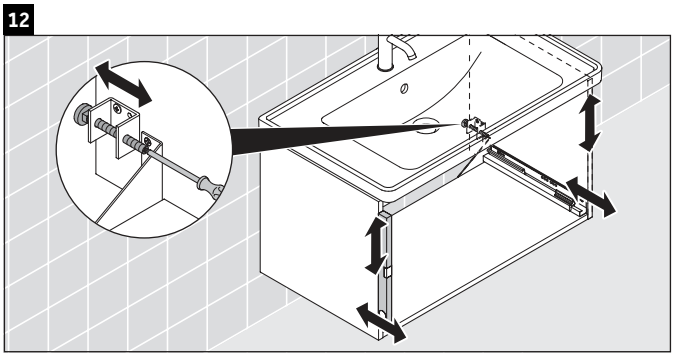

13

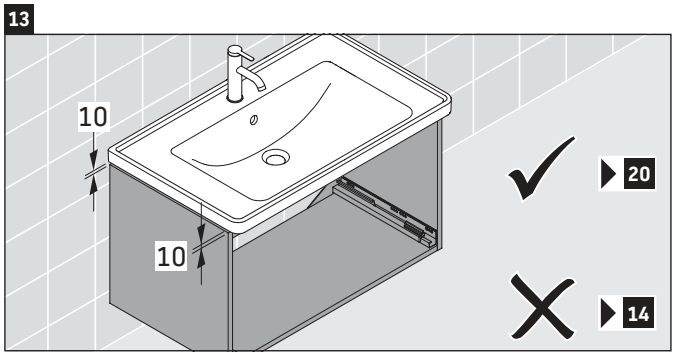

14

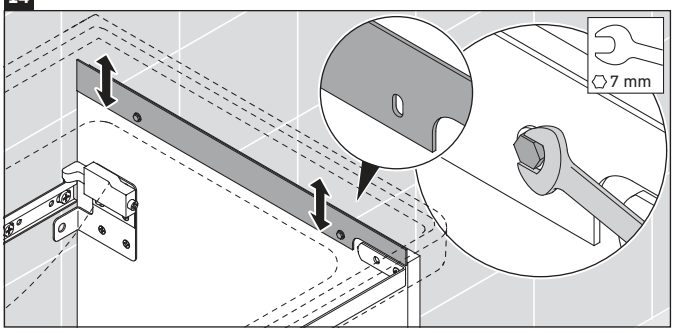

15

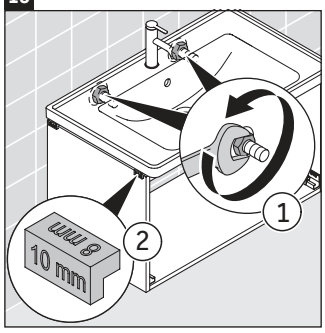

16

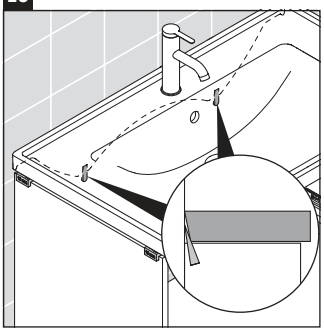

Order no. DE4254/21.01.1

Duravit AG, Werderstr. 36, 78132 Hornberg, Germany, Phone +49 78 33 700, Fax +49 78 33 70 289, info@duravit.de, www.duravit.de

17

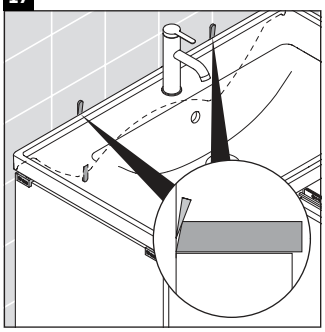

18

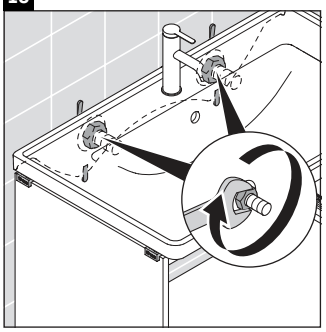

19

20

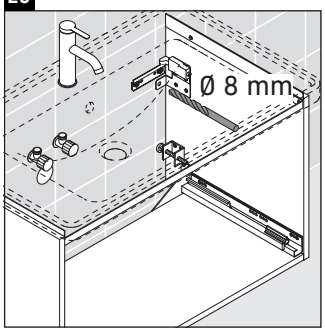

21

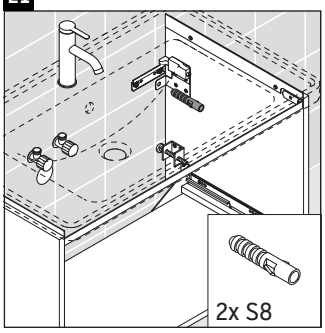

22

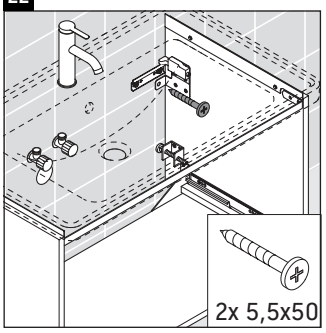

23

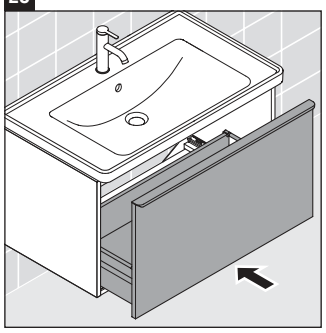

24

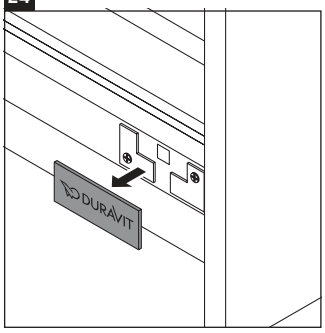

25

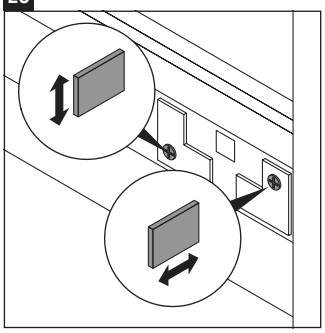

26

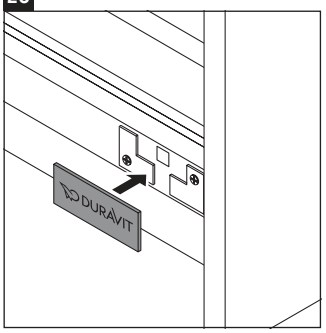

27

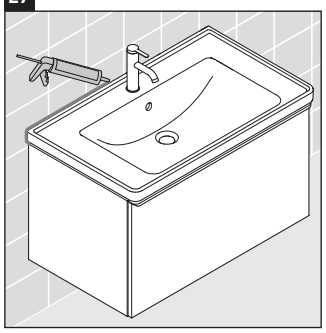

Order no. DE4254/21.01.1

Duravit AG, Werderstr. 36, 78132 Hornberg, Germany, Phone +49 78 33 700, Fax +49 78 33 70 289, info@duravit.de, www.duravit.de

Duravit AG
P.O. Box 240
Werderstr. 36
78132 Hornberg
Germany
Phone +49 78 33 70 0
Fax +49 78 33 70 289
info@duravit.com
www.duravit.com

Order no. DE4254/21.01.1

D-Neo # DE 4254

설치 설명서

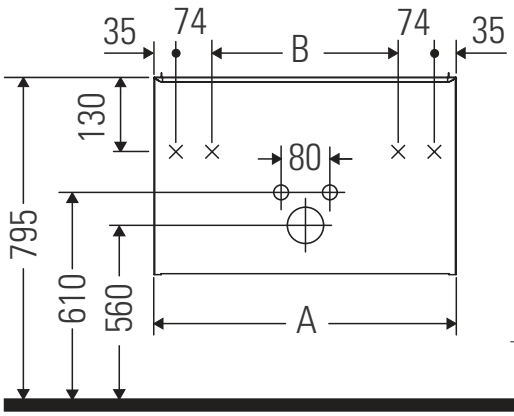

A mm	B mm	W mm	X mm
634	416	55	795

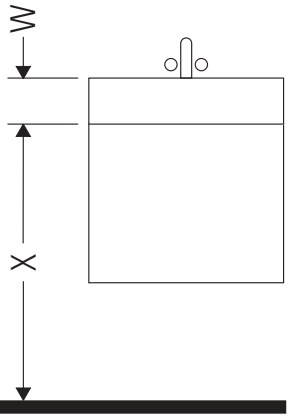

D-Neo # 236765

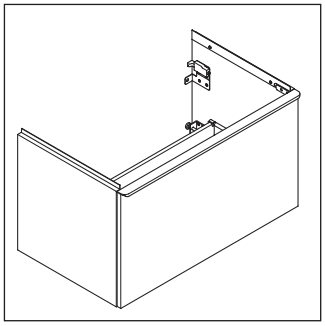

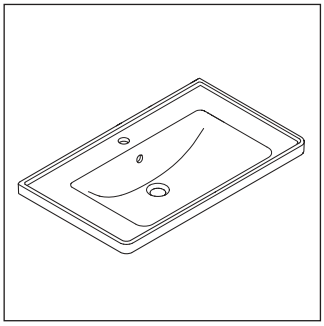

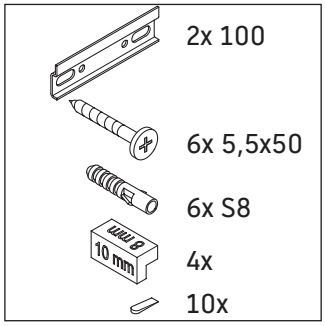

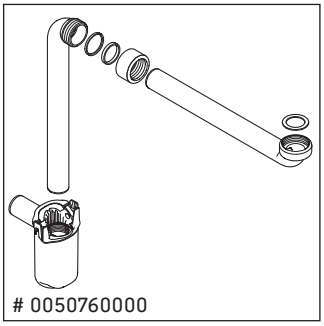

사용 지침

본 욕실 가구 시리즈는 배송 시의 해당 표준 및 지침을 준수하며 욕실 설치용으로 제조되었습니다. 물과의 직접 접촉(예: 샤워 시)을 피하십시오.

사진에 제시된 제품에 기술적인 개선 및 디자인 변경이 있을 수 있습니다.

1

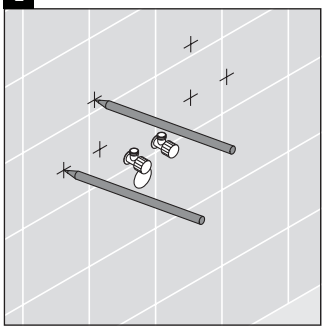

2

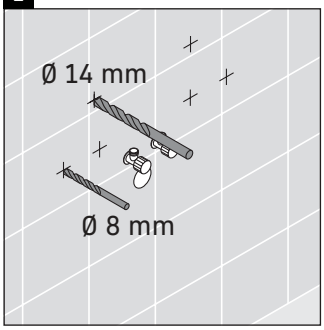

3

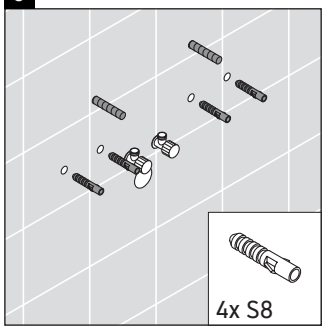

4

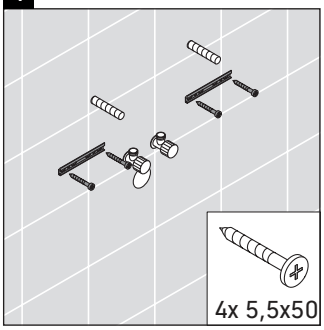

5

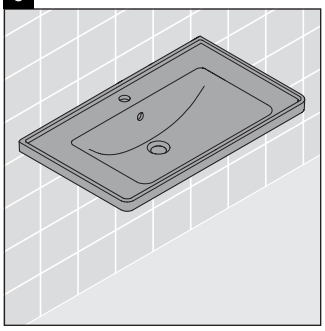

6

7

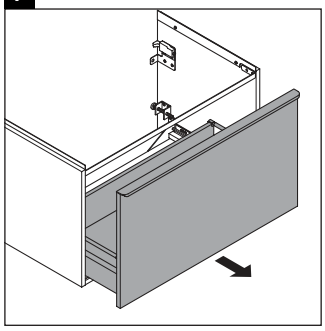

8

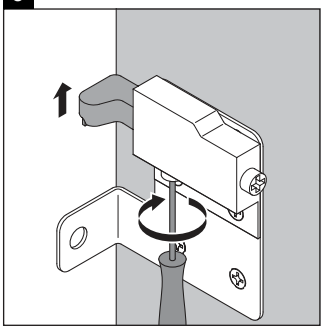

9

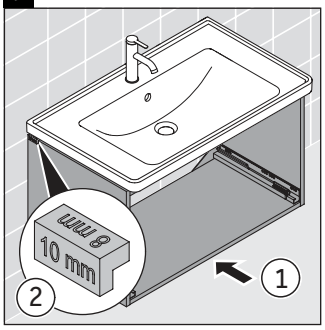

10

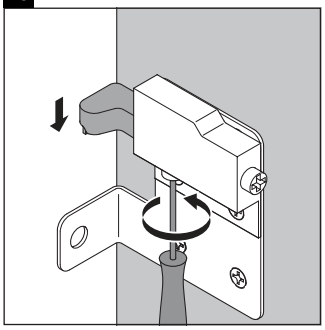

11

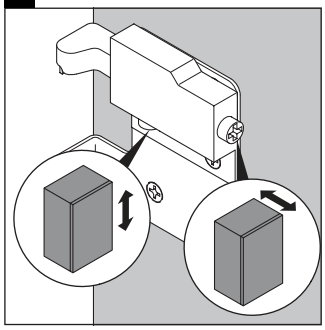

12

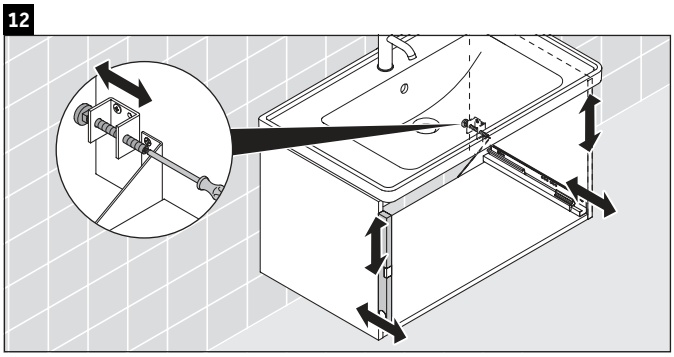

13

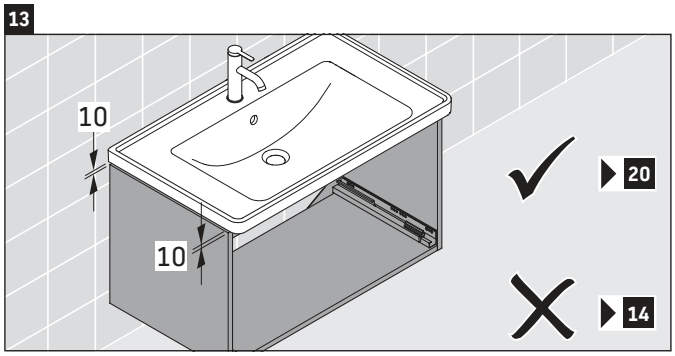

14

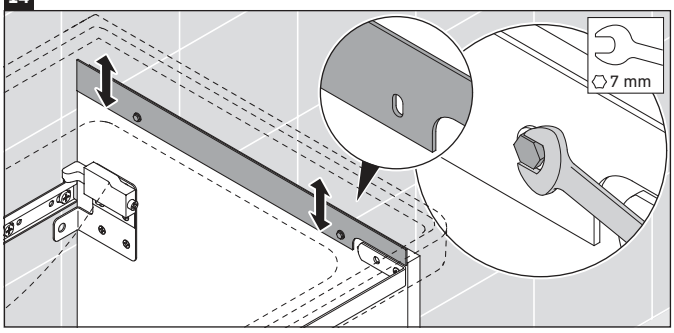

15

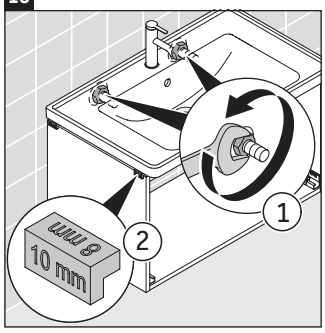

16

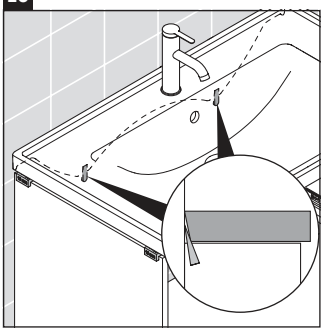

Order no. DE4254/21.01.1

Duravit AG, Werderstr. 36, 78132 Hornberg, Germany, Phone +49 78 33 700, Fax +49 78 33 70 289, info@duravit.de, www.duravit.de

17

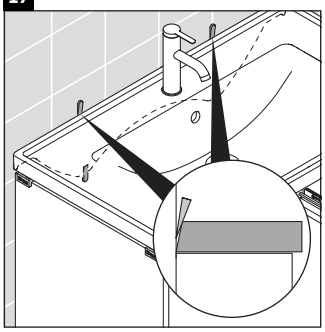

18

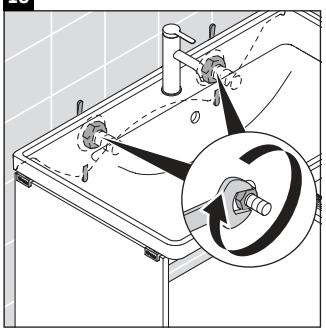

19

20

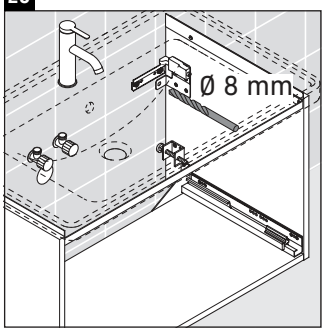

21

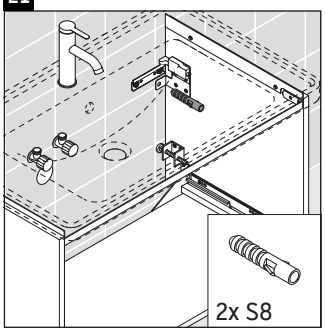

22

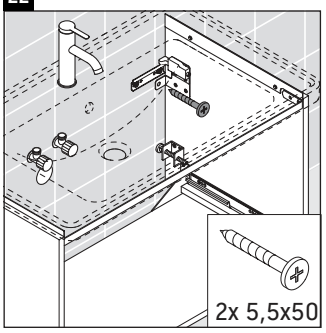

23

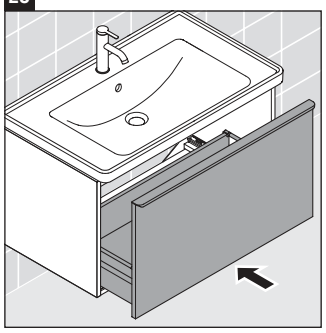

24

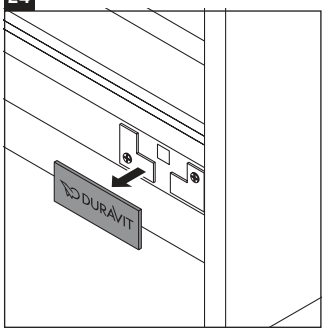

25

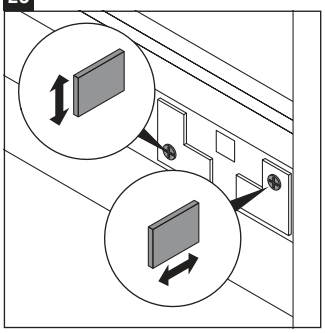

26

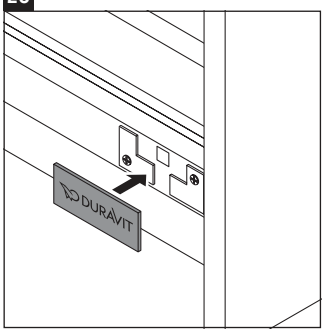

27

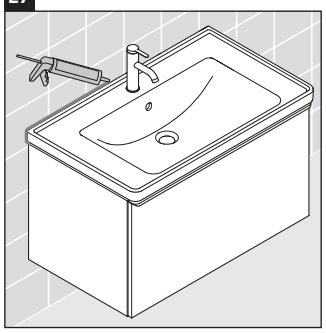

Order no. DE4254/21.01.1

Duravit AG, Werderstr. 36, 78132 Hornberg, Germany, Phone +49 78 33 700, Fax +49 78 33 70 289, info@duravit.de, www.duravit.de

Duravit AG
P.O. Box 240
Werderstr. 36
78132 Hornberg
Germany
Phone +49 78 33 70 0
Fax +49 78 33 70 289
info@duravit.com
www.duravit.com

Order no. DE4254/21.01.1

D-Neo # DE 4254

Ръководство за монтаж

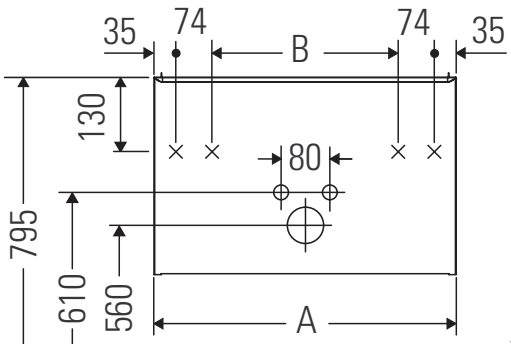

A mm	B mm	W mm	X mm
634	416	55	795

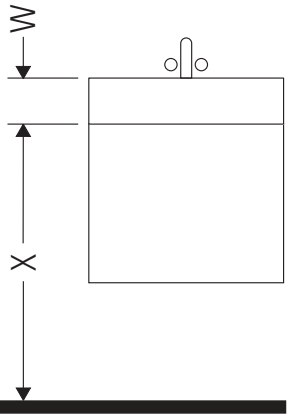

D-Neo # 236765

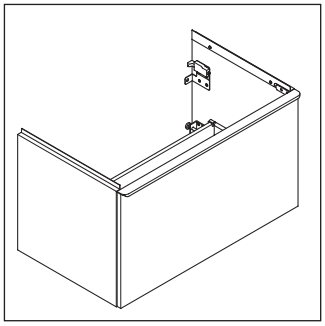

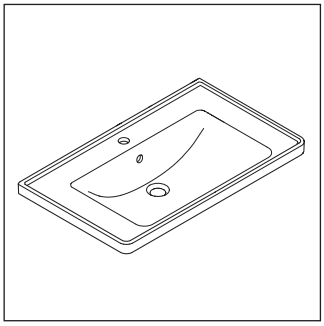

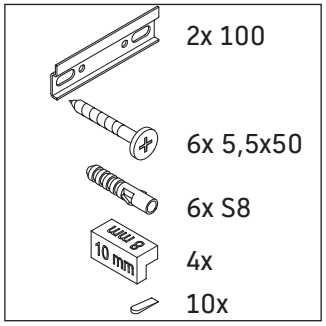

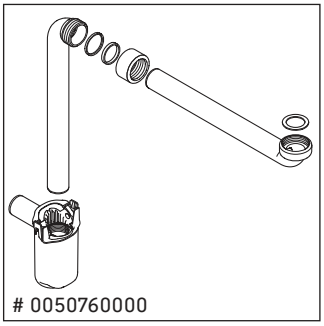

Указания за употреба

Серията мебели за баня отговаря на действащите стандарти и директиви към момента на доставката и е създадена за използване в бани. Да се избягва директно пръскане с вода, напр. при използването на душа.

Запазваме си правото за технически подобрения и оптични промени на изобразените изделия.

1

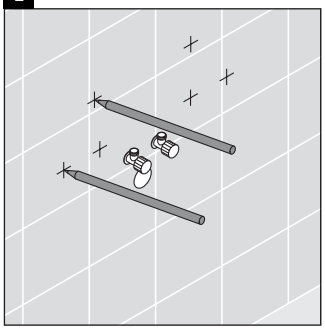

2

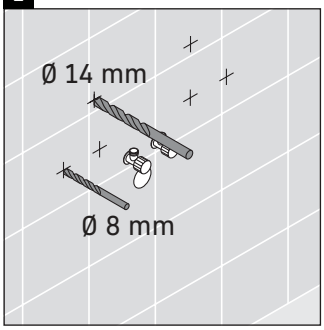

3

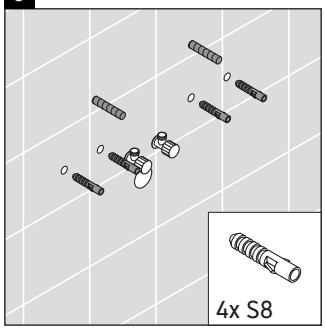

4

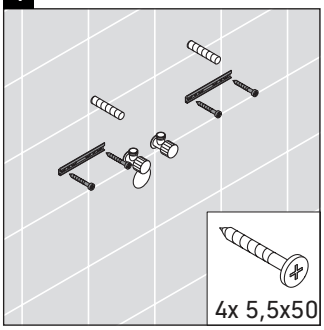

5

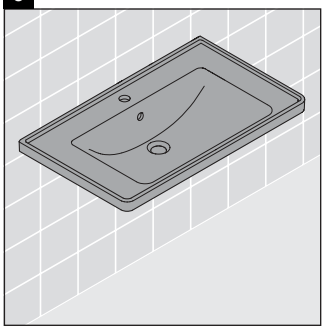

6

7

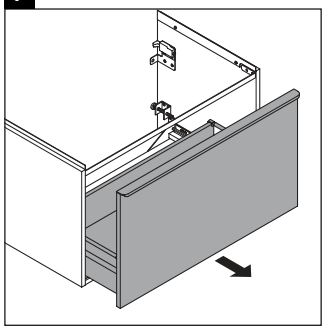

8

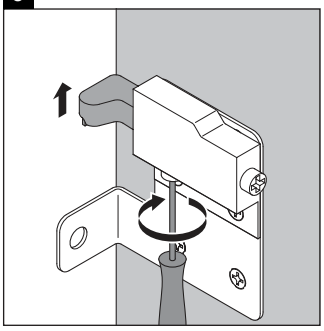

9

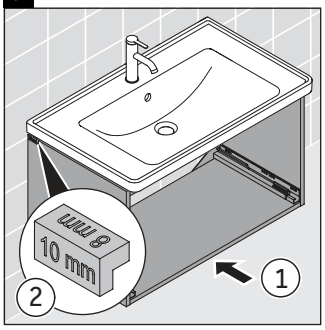

10

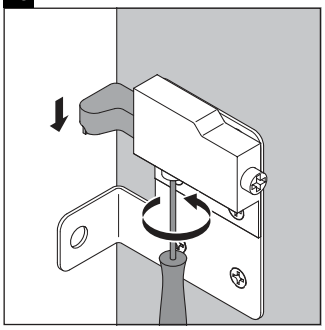

11

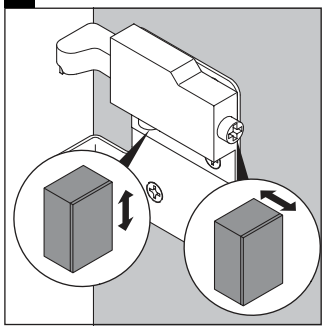

12

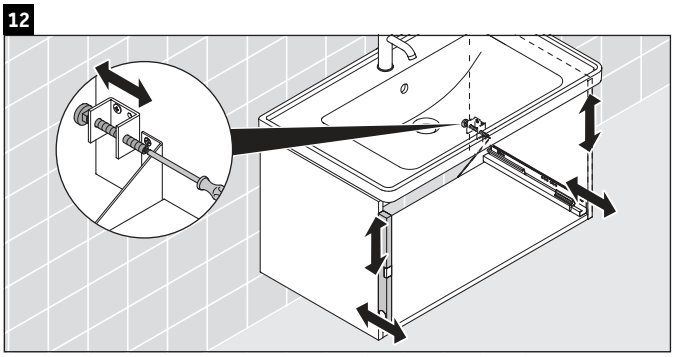

13

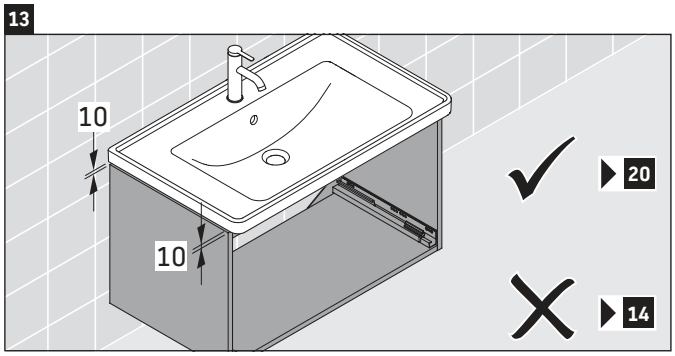

14

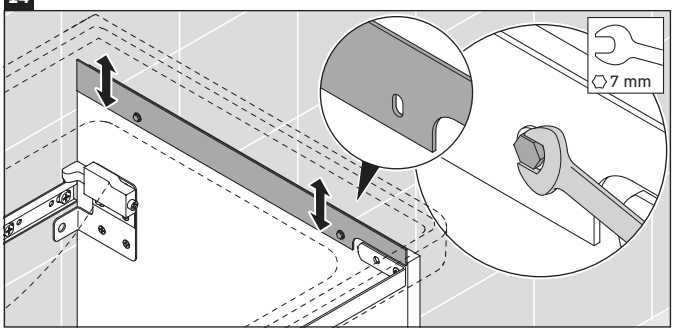

15

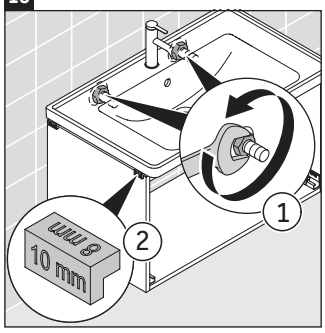

16

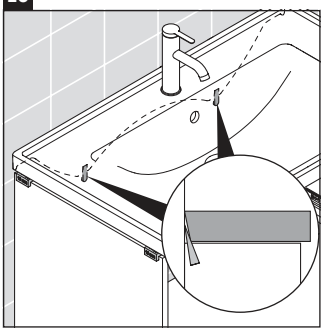

Order no. DE4254/21.01.1

Duravit AG, Werderstr. 36, 78132 Hornberg, Germany, Phone +49 78 33 700, Fax +49 78 33 70 289, info@duravit.de, www.duravit.de

17

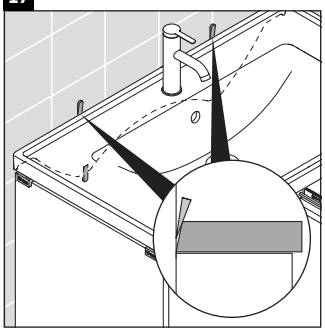

18

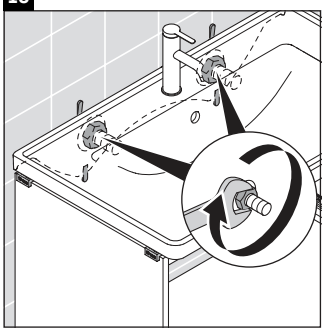

19

20

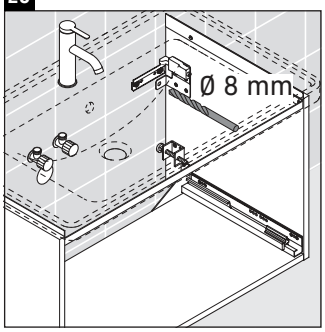

21

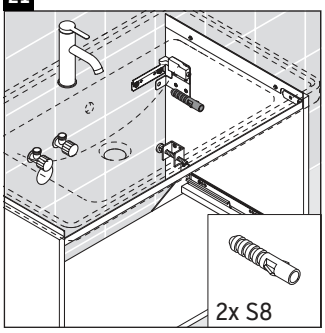

22

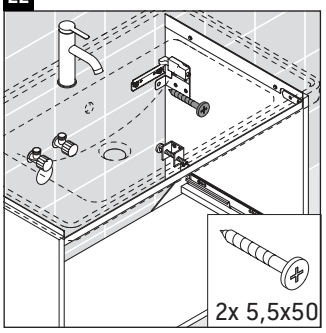

23

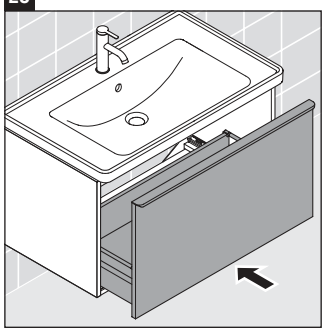

24

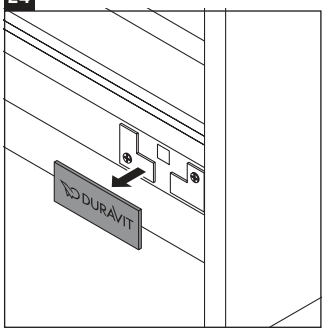

25

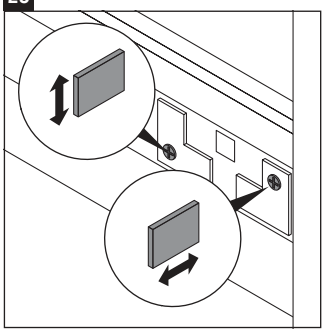

26

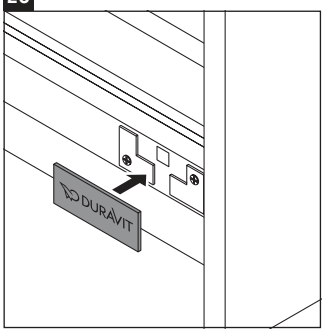

27

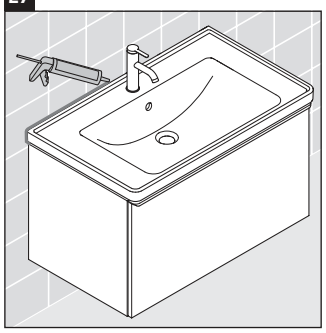

Order no. DE4254/21.01.1

Duravit AG, Werderstr. 36, 78132 Hornberg, Germany, Phone +49 78 33 700, Fax +49 78 33 70 289, info@duravit.de, www.duravit.de

Duravit AG
P.O. Box 240
Werderstr. 36
78132 Hornberg
Germany
Phone +49 78 33 70 0
Fax +49 78 33 70 289
info@duravit.com
www.duravit.com

Order no. DE4254/21.01.1

D-Neo # DE 4254

Navodila za montažo

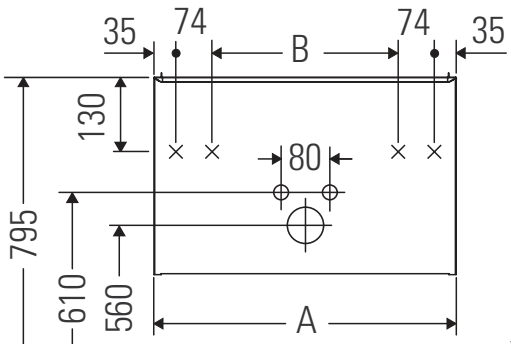

A mm	B mm	W mm	X mm
634	416	55	795

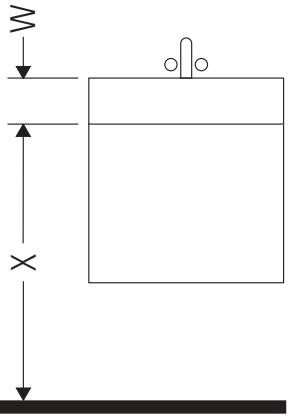

D-Neo # 236765

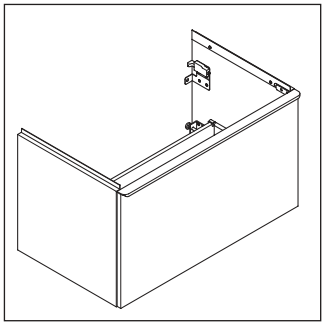

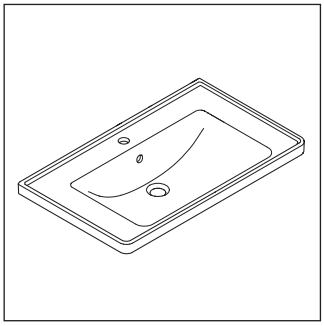

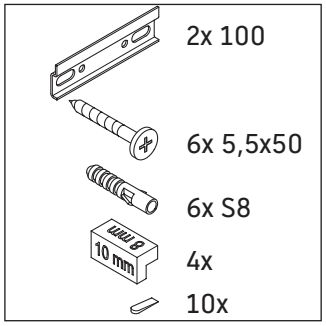

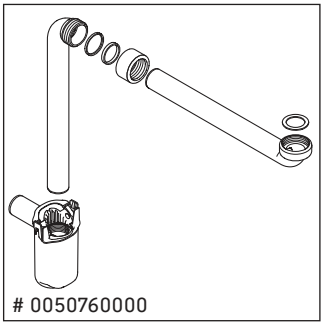

Napotki za uporabo

Serija kopalniškega pohištva izpolnjuje standarde in smernice, veljavne v času dobave, in je zasnovana za uporabo v kopalnicah. Izogibajte se direktnemu škropljenju z vodo, npr. med prhanjem.

Pridržujemo si pravico do tehničnih izboljšav in optičnih sprememb na prikazanih proizvodih.

1

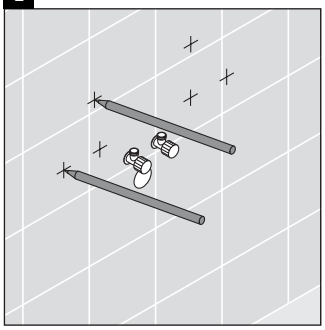

2

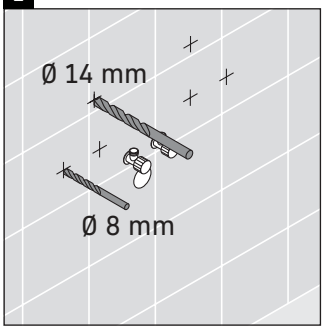

3

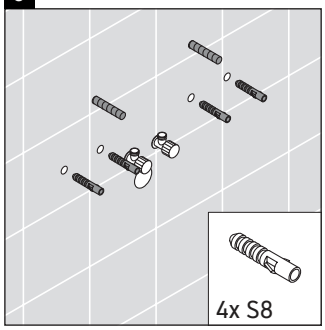

4

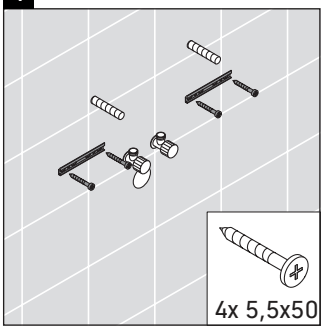

5

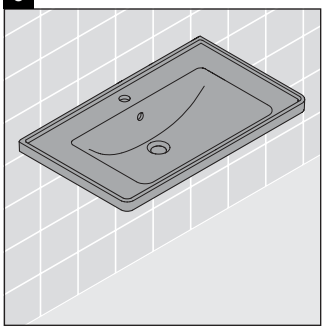

6

7

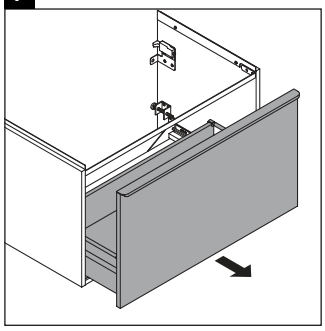

8

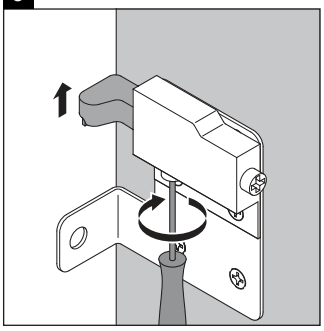

9

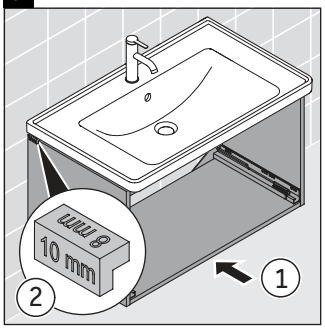

10

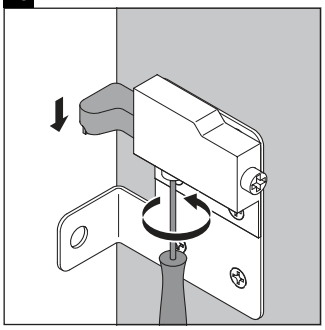

11

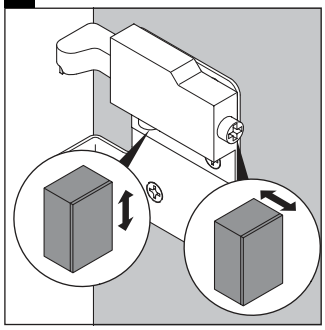

12

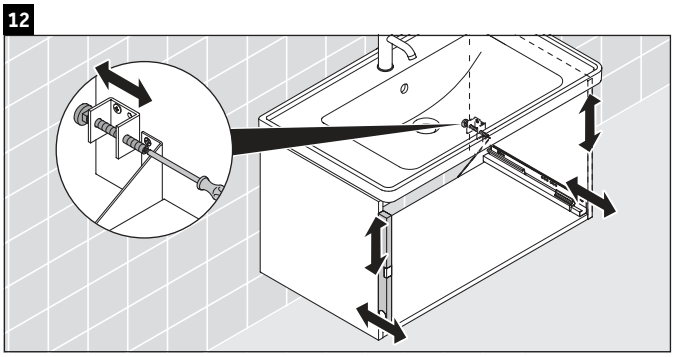

13

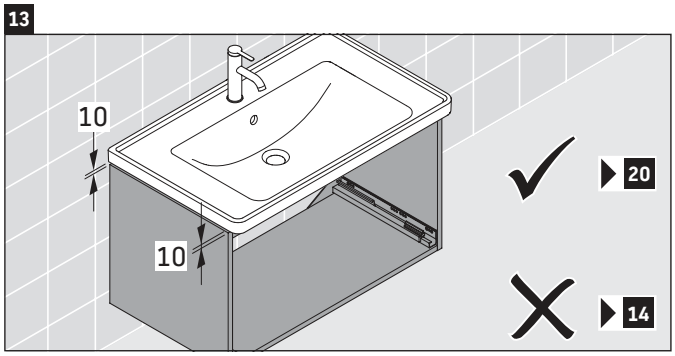

14

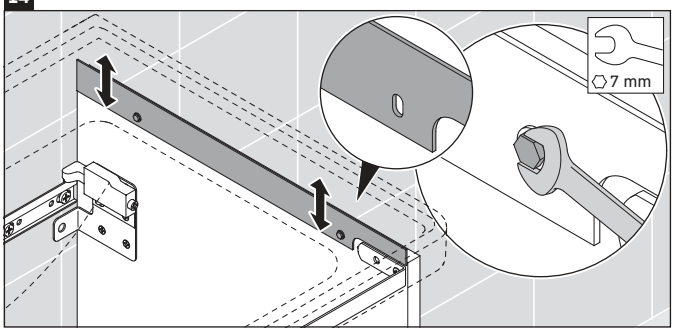

15

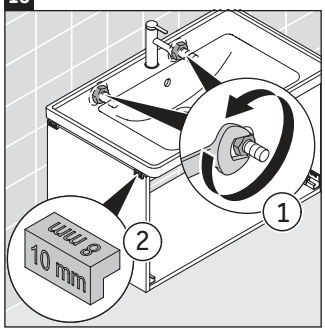

16

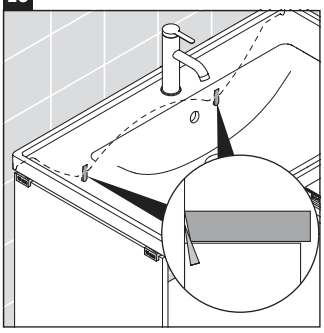

Order no. DE4254/21.01.1

Duravit AG, Werderstr. 36, 78132 Hornberg, Germany, Phone +49 78 33 700, Fax +49 78 33 70 289, info@duravit.de, www.duravit.de

17

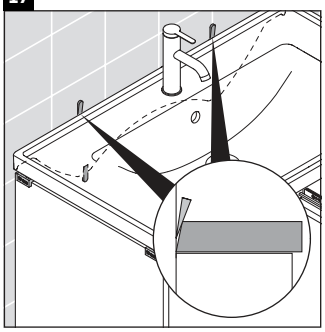

18

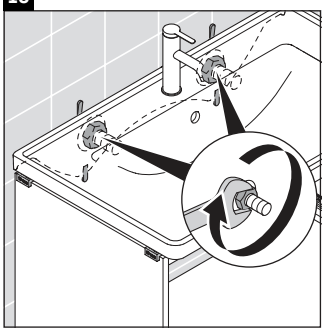

19

20

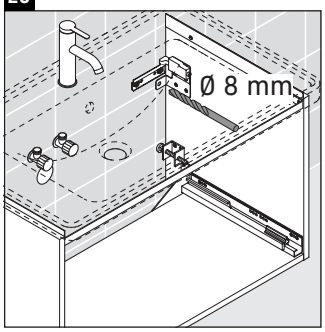

21

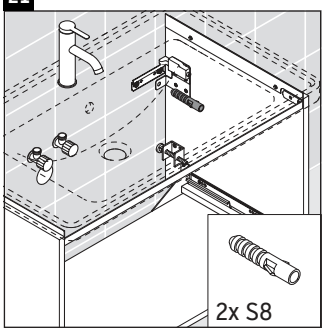

22

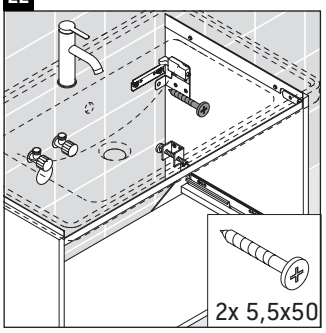

23

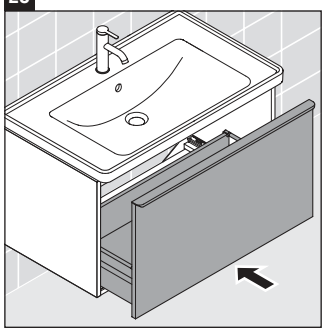

24

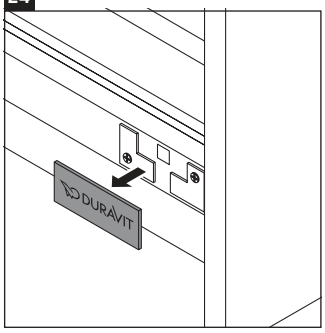

25

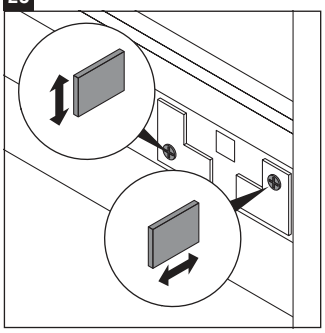

26

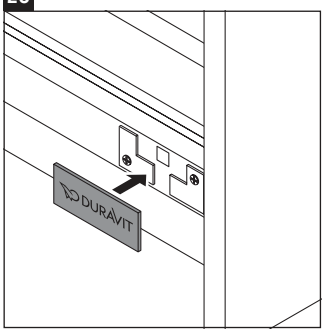

27

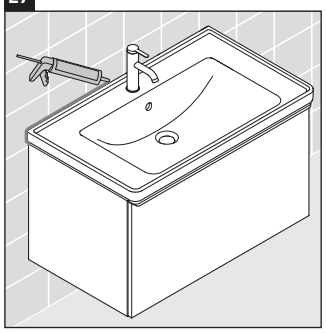

Order no. DE4254/21.01.1

Duravit AG, Werderstr. 36, 78132 Hornberg, Germany, Phone +49 78 33 700, Fax +49 78 33 70 289, info@duravit.de, www.duravit.de

Duravit AG
P.O. Box 240
Werderstr. 36
78132 Hornberg
Germany
Phone +49 78 33 70 0
Fax +49 78 33 70 289
info@duravit.com
www.duravit.com

Order no. DE4254/21.01.1

D-Neo # DE 4254

Montāžas instrukcija

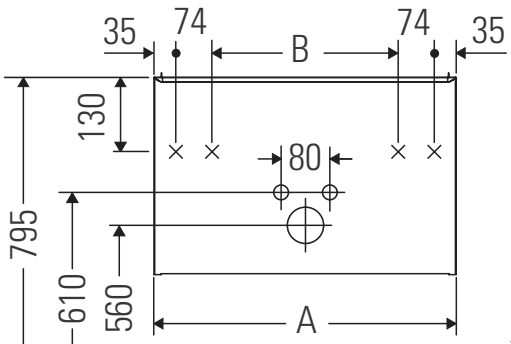

A mm	B mm	W mm	X mm
634	416	55	795

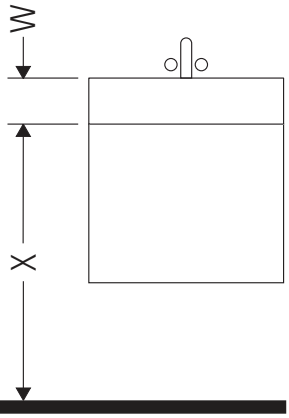

D-Neo # 236765

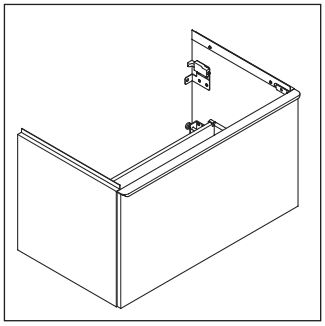

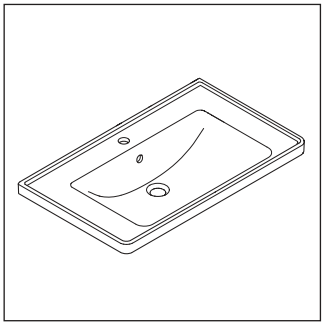

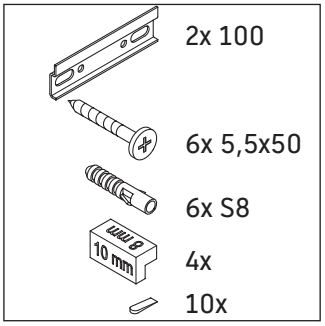

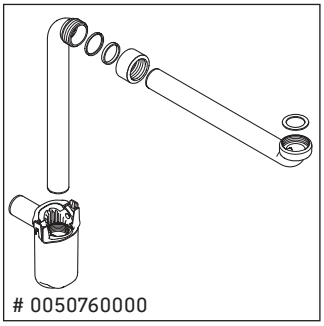

Lietošanas norādījumi

Vannas istabas mēbeļu sērija atbilst standartiem un direktīvām, kas bija spēkā produkta piegādes brīdī, un ir paredzēta izmantošanai vannas istabās. Jānovērš tieša saslapināšana ar ūdeni, piem., mazgājoties dušā.

Saglabājam tiesības veikt tehnisku pilnveidošanu un mainīt attēlos redzamo izstrādājumu vizuālo noformējumu.

1

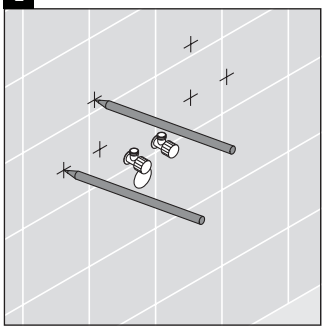

2

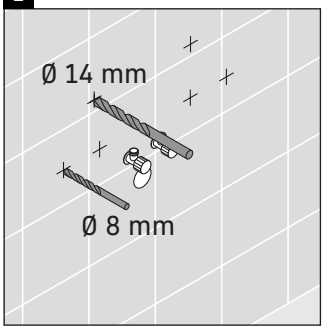

3

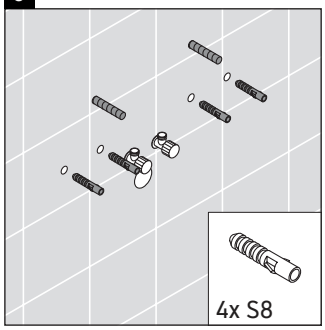

4

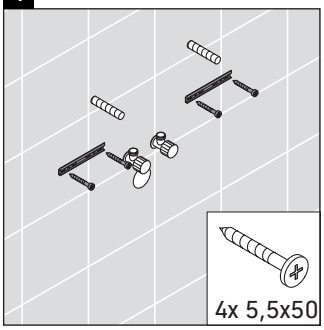

5

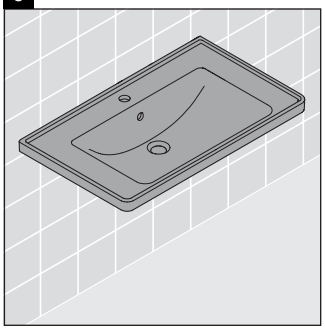

6

7

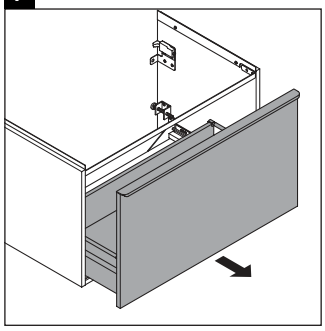

8

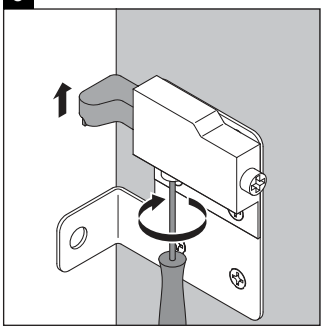

9

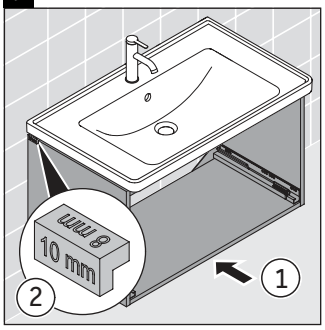

10

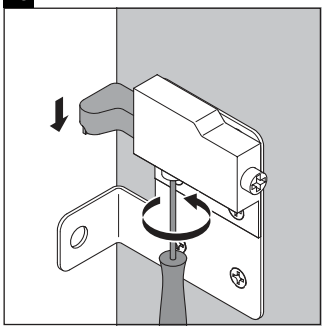

11

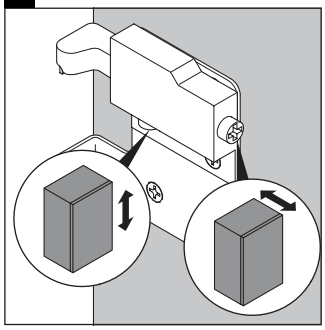

12

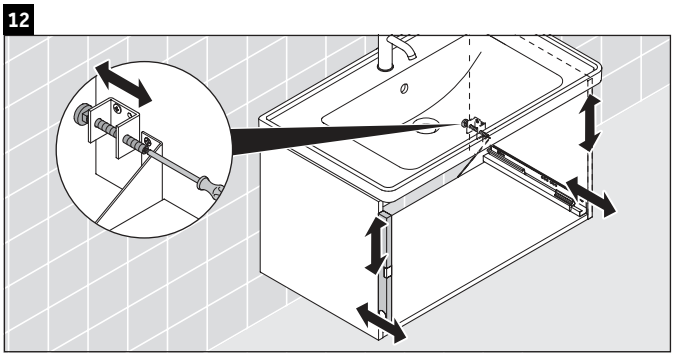

13

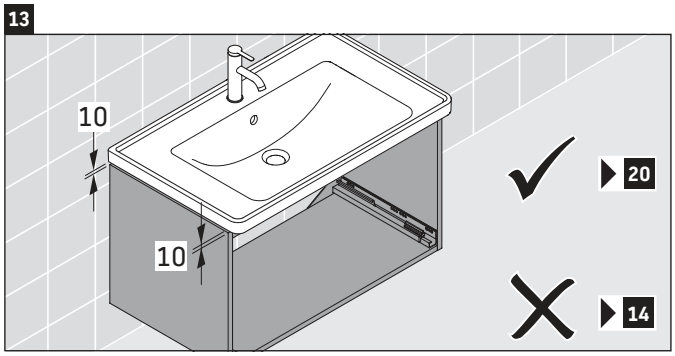

14

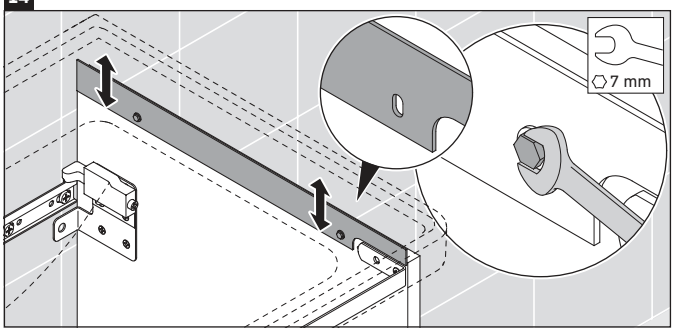

15

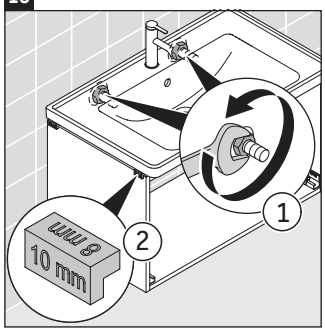

16

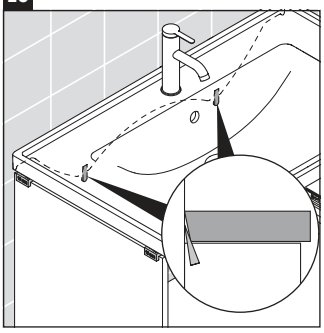

Order no. DE4254/21.01.1

Duravit AG, Werderstr. 36, 78132 Hornberg, Germany, Phone +49 78 33 700, Fax +49 78 33 70 289, info@duravit.de, www.duravit.de

17

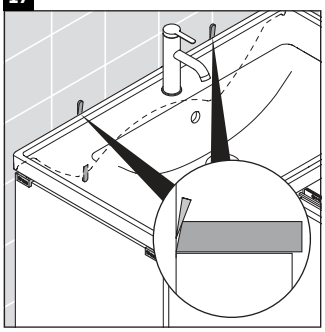

18

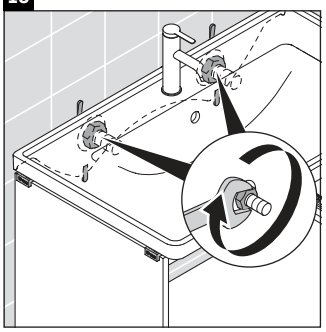

19

20

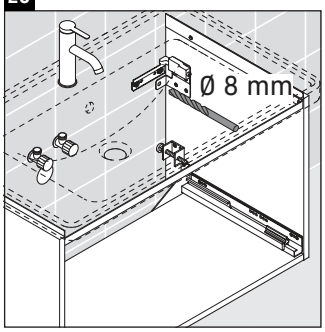

21

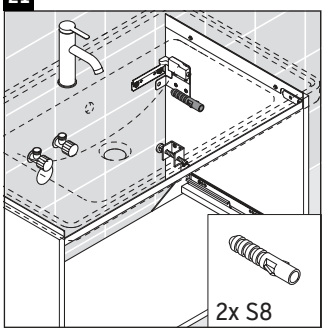

22

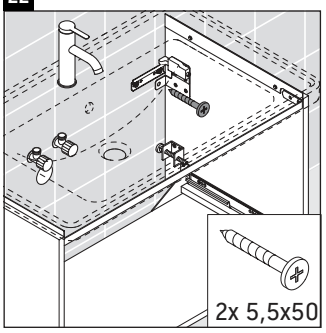

23

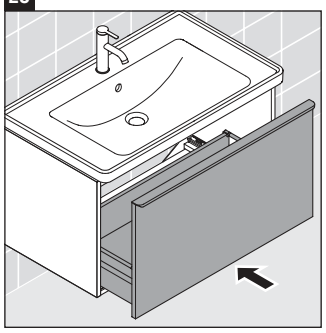

24

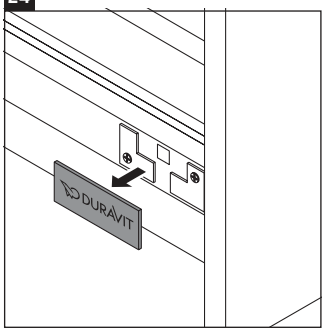

25

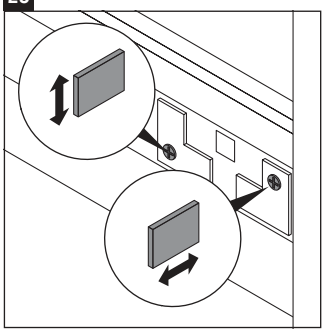

26

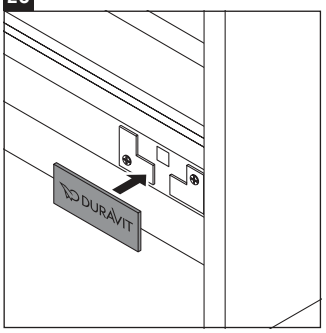

27

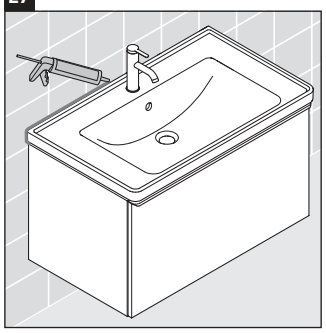

Order no. DE4254/21.01.1

Duravit AG, Werderstr. 36, 78132 Hornberg, Germany, Phone +49 78 33 700, Fax +49 78 33 70 289, info@duravit.de, www.duravit.de

Duravit AG
P.O. Box 240
Werderstr. 36
78132 Hornberg
Germany
Phone +49 78 33 70 0
Fax +49 78 33 70 289
info@duravit.com
www.duravit.com

Order no. DE4254/21.01.1